SAMSUNG

Data Book

Semiconductor
PRODUCT GUIDE
1992/93

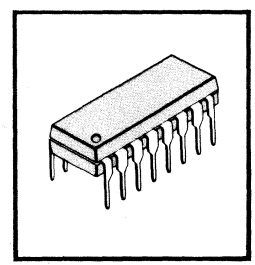

PRODUCT GUIDE

Transistors
Power MOSFETs
Linear ICs
Data Converter
CMOS ICs
Voice Synthesizer ICs
LCD Products
Application Specific Standard Products
Microprocessor Peripheral ICs
ASIC Products
Single-Chip Microcontrollers
MOS Memory ICs

TABLE OF CONTENTS

FUNCTION GUIDE 1

1. SMALL SIGNAL TRANSISTORS

1.1 General Purpose Transistors

1.1.1 SOT-23 Type Transistors

Device and Polarity (Marking)				Condition		h_{FE}		Condition		$V_{CE}(sat)$, $V_{BE}(sat)$(V)		Condition		f_T(MHz)	
NPN	PNP	V_{CEO} (V)	I_C (A)	V_{CE} (V)	I_C (mA)	MIN	MAX	I_C (mA)	I_B (mA)	MAX	MAX	V_{CE} (V)	I_C (mA)	MIN	TYP
KST06(1G)	KST56(2G)	80	0.5	1	100	50		100	10	0.25		2	10	100	
KST05(1H)	KST55(2H)	60	0.5	1	100	50		100	10	0.25		2	10	100	
	KST2907A(2F)	60	0.6	10	150	100	300	500	50	1.6	2.6	20	50	200	
KSC1623(C1X)	KSA812(D1X)	50	0.1	6	1	90	600	100	10	0.3	1	6	10		250
BCW71(K1)		45	0.1	5	2	110	220	50	2.5			5	10		300
BCX70G(AG)		45	0.1	5	2	120	220	50	1.25	0.55	1.05	5	10	125	
BCX70H(AH)		45	0.1	5	2	180	310	50	1.25	0.55	1.05	5	10	125	
BCX70J(AJ)		45	0.1	5	2	250	460	50	1.25	0.55	1.05	5	10	125	
BCX70K(AK)		45	0.1	5	2	380	630	50	1.25	0.55	1.05	5	10	125	
	BCX71G(BG)	45	0.1	5	2	120	220	50	1.25	0.55	1.05				
	BCX71H(BH)	45	0.1	5	2	180	310	50	1.25	0.55	1.05				
	BCX71J(BJ)	45	0.1	5	2	250	460	50	1.25	0.55	1.05				
	BCX71K(BK)	45	0.1	5	2	380	630	50	1.25	0.55	1.05				
KST1623L3(L3)		40	0.1	6	1	60	120	30	3	0.5					
KST1623L4(L4)	KST812M4(M4)	40	0.1	6	1	90	180	30	3	0.5					
KST1623L5(L5)	KST812M5(M5)	40	0.1	6	1	135	270	30	3	0.5					
KST1623L6(L6)	KST812M6(M6)	40	0.1	6	1	200	400	30	3	0.5					
KST1623L7(L7)	KST812M7(M7)	40	0.1	6	1	300	600	30	3	0.5					
KST2222A(1P)		40	0.6	10	150	100	300	500	50	1.6	2.6	20	20	300	
	KST2907(2B)	40	0.6	10	150	100	300	500	50	1.6	2.6	20	50	200	
KST3903(1Y)		40	0.2	1	10	50	150	50	5	0.3	0.95	20	10	250	
KST3904(1A)	KST3906(2A)	40	0.2	1	10	100	300	50	5	0.3	0.95	20	10	300	
KST4401(2X)	KST4403(2T)	40	0.6	1	150	100	300	500	50	0.7	1.2	10	10	250	
KST20(1C)	KST70(2C)	40	0.1	10	5	40	400	10	1	0.25		10	5	125	
BCW60A(AA)	BCW61A(BA)	32	0.1	5	2	120	220	50	1.25	0.55	1.05	5	10	125	
BCW60B(AB)	BCW61B(BB)	32	0.1	5	2	180	310	50	1.25	0.55	1.05	5	10	125	
BCW60C(AC)	BCW61C(BC)	32	0.1	5	2	250	460	50	1.25	0.55	1.05	5	10	125	
BCW60D(AD)	BCW61D(BD)	32	0.1	5	2	380	630	50	1.25	0.55	1.05	5	10	125	
KST2222(1B)		30	0.6	10	150	100	300	500	50	1.6	2.6	20	20	200	
KSC2859(E1X)	KSA1182(F1X)	30	0.5	1	100	70	240	100	10	0.25		6	20		200
KST4123(5B)	KST4125(ZD)	30	0.2	1	2	50	150	50	5	0.3	0.95	20	10	250	
KSC3265(K1X)	KSA1298(J1X)	25	0.8	1	100	100	320	500	20	0.4		5	10		120
KST1009F1(F1)		25	0.05	3	0.5	30	60	10	1	0.3		6	1	150	

SOT-23 Type Transistors (Continued)

Device and Polarity (Marking)				Condition		h_{FE}		Condition		$V_{CE}(sat)$, $V_{BE}(sat)$(V)		Condition		f_T(MHz)	
NPN	PNP	V_{CEO} (V)	I_C (A)	V_{CE} (V)	I_C (mA)	MIN	MAX	I_C (mA)	I_B (mA)	MAX	MAX	V_{CE} (V)	I_C (mA)	MIN	TYP
KST1009F2(F2)		25	0.05	3	0.5	40	80	10	1	0.3		6	1	150	
KST1009F3(F3)		25	0.05	3	0.5	60	120	10	1	0.3		6	1	150	
KST1009F4(F4)		25	0.05	3	0.5	90	180	10	1	0.3		6	1	150	
KST1009F5(F5)		25	0.05	3	0.5	135	270	10	1	0.3		6	1	150	
KST4124(ZC)	KST4126(C3)	25	0.2	1	2	120	360	50	5	0.3	0.95	20	10	300	
	BCW29(C1)	20	0.1	5	2	120	260	10	0.5	0.3					
BCW31(D1)		20	0.1	5	2	110	220	10	0.5	0.3					

1.1.2 TO-92S Type Transistors

Device and Polarity				Condition		h_{FE}		Condition		$V_{CE}(sat)$, $V_{BE}(sat)$(V)				Condition		f_T(MHz)	
NPN	PNP	V_{CEO} (V)	I_C (A)	V_{CE} (V)	I_C (mA)	MIN	MAX	I_C (mA)	I_B (mA)	TYP	MAX	TYP	MAX	V_{CE} (V)	I_C (mA)	MIN	TYP
	KSA1150	20	0.5	1	100	40	400	500	50	0.3	0.4	1	1.3	6	10		
	KSA1378	25	0.3	1	50	70	400	300	30	0.35	0.6						
	KSB810	25	0.7	1	100	70	400	700	70	0.25	0.4	0.95	1.2	6	10	50	160
	KSB811	25	1	0	100	70	400	1000	100		0.5		1.2	6	10		110
KSC2710		20	0.5	1	100	40	400	500	50	0.18	0.4						
KSC3488		25	0.3	1	50	70	400	300	30	0.14	0.4						
KSD1020		25	0.7	1	100	70	400	700	70	0.2	0.4	0.95	1.2	6	10	50	170
KSD1021		30	1	1	100	70	400	1000	100		0.5		1.2	6	10		130

1.1.3 TO-92 Type Transistors

Device and Polarity				Condition		h_{FE}		Condition		$V_{CE}(sat)$, $V_{BE}(sat)$(V)		Condition		f_T(MHz)	
NPN	PNP	V_{CEO} (V)	I_C (A)	V_{CE} (V)	I_C (mA)	MIN	MAX	I_C (mA)	I_B (mA)	MAX	MAX	V_{CE} (V)	I_C (mA)	MIN	TYP
KSP06	KSP56	80	0.5	1	100	50		100	10	0.25		2	10	100	
KSP8099	KSP8599	80	0.5	5	1	100	300	100	10	0.3		5	10	150	
KSC2003	KSA954	80	0.3	1	50	90	400	300	30	0.6	1.2	6	10	50	100
KSD1616A	KSB1116A	60	1	2	100	135	400	1000	50	0.3	1.2	2	100	70	
KSC1008	KSA708	60	0.7	2	50	40	240	500	50	0.7	1.1	10	50		50
	KSP2907A	60	0.6	10	150	100	300	500	50	1.6	2.6	20	50	200	
KSP8098	KSP8598	60	0.5	5	1	100	300	100	10	0.3		5	10	150	
KSP05	KSP55	60	0.5	1	100	50		100	10	0.25		2	10	100	
KSC2002	KSA953	60	0.3	1	50	90	400	300	30	0.6	1.2	6	10	50	100
KSC853	KSA545	60	0.2	1	50	40	400	150	15	0.5	1.2				
KSD1616	KSB1116	50	1	2	100	135	600	1000	50	0.3	1.2	2	100	70	100
KSC1072	KSA707	45	0.7	2	50	40	240	500	50	0.7	1.1				
KSC815	KSA539	45	0.2	1	0.05	40	240	150	15	0.5	1.2				
SS9014	SS9015	45	0.1	5	1	60	1000	100	5	0.3	1	5	10	150	270

TO-92 Type Transistors (Continued)

Device and Polarity				Condition		h_{FE}		Condition		$V_{CE}(sat)$, $V_{BE}(sat)$(V)		Condition		f_T(MHz)	
NPN	PNP	V_{CEO} (V)	I_C (A)	V_{CE} (V)	I_C (mA)	MIN	MAX	I_C (mA)	I_B (mA)	MAX	MAX	V_{CE} (V)	I_C (mA)	MIN	TYP
KSP6602		40	1	1	500	50		1000	100	0.6		10	50	100	
2N4401	2N4403	40	0.6	1	150	100	300	500	50	0.75	1.2	10	20	200	
KSP2222A	KSP2907	40	0.6	10	150	100	300	500	50	1.6	2.6	20	20	300	
2N4400	2N4402	40	0.6	1	150	50	150	500	50	0.75	1.2	10	20	200	
2N3903	2N3905	40	0.2	1	10	50	150	50	5	0.3	0.95	20	10	250	
2N3904	2N3906	40	0.2	1	10	100	300	50	5	0.3	0.95	20	10	300	
KSP20	KSP70	40	0.1	10	5	40	400					10	5	125	
KSC1330		40	0.1	6	1	70	400	30	3	0.5		6	10		300
KSD471A		30	1	1	100	70	400	1000	100	0.5	1.2	6	10		130
KSP 2222		30	0.6	10	150	100	300	500	50	1.6	2.6	20	20	250	
KSC921		30	0.1	10	2	40	240	10	1	0.6		10	1	100	250
KSC839		30	0.1	12	2	40	400	10	1	0.4		10	1	80	200
SS9011		30	0.03	5	1	28	198	10	1	0.3					
SS8050	SS8550	25	1.5		100	85	300	800	80	0.5	1.2	10	50	100	190
	KSB564A	25	1		100	70	400	1000	100	0.5	1.2	10	10		110
KSD227	KSA642	25	0.3		50	70	400	300	30	0.6					
KSP5172		25	0.1		10	100	500	10	1	0.25			2		120
KSC184	KSA542	25	0.05		1	40	400	20	2	0.3		6	1		100
KSD261	KSA643	20	0.5		100	40	400	500	50	0.4	1.3	1			
SS9013	SS9012	20	0.5		50	64	202	500	50	0.6	1.2				
KSD5019		2	1	500	140	600	2000	50	0.5		1	500		150	
KSD5041		20	5	2	500	180	600								150

1.1.4 TO-92L Type Transistors

Device and Polarity				Condition		h_{FE}		Condition		$V_{CE}(sat)$, $V_{BE}(sat)$(V)		Condition		f_T(MHz)	
NPN	PNP	V_{CEO} (V)	I_C (A)	V_{CE} (V)	I_C (mA)	MIN	MAX	I_C (mA)	I_B (mA)	MAX	MAX	V_{CE} (V)	I_C (mA)	MIN	TYP
KSC2328A	KSA928A	30	2	2	500	100	320	1500	30	2		2	500		120
KSC2331	KSA931	60	0.7	2	50	40	240	500	50	0.7	1.2	10	50		100
KSC2500		10	2	1	500	140	600	2000	50	0.5		1	500		150

1.1.5 SOT-89 Type Transistors

Device and Polarity				Condition		h_{FE}		Condition		$V_{CE}(sat)$, $V_{BE}(sat)$(V)		Condition		f_T(MHz)	
NPN	PNP	V_{CEO} (V)	I_C (A)	V_{CE} (V)	I_C (mA)	MIN	MAX	I_C (mA)	I_B (mA)	MAX	MAX	V_{CE} (V)	I_C (mA)	MIN	TYP
KSC2882	KSA1202	80	0.4	2	50	70	240	200	20	0.4		10	10		120
KSC2883	KSA1203	30	1.5	2	500	100	320	1500	30	2		2	500		120
KSC2884	KSA1204	30	0.8	1	100	100	320	500	20	0.7		5	10		120
KSD999	KSB798	25	1	1	100	90	400	1000	100	0.4	1.2	6	10		110
KSD1621	KSB1121	25	2	2	100	100	560	1500	75	0.6	1.2	10	50		150
KSC2982		30	2	1	500	140	600	2000	50	0.5		1	500		150

1.2 Low Noise Transistors

1.2.1 SOT-23 Type Transistors

Device and Polarity (Marking)		NF (dB)				Condition		h_{FE}		Condition		$V_{CE}(sat)(V)$
NPN	PNP	MAX	Condition Frequency	V_{CEO} (V)	I_C (A)	V_{CE} (V)	I_C (mA)	MIN	MAX	I_C (mA)	I_B (mA)	MAX
KST6428(1K)		4	Audio	50	0.2	5	0.1	250	650	100	5	0.6
KST2484(1U)		3	Audio	60	0.05	5	1	250		1	0.1	0.35
	KST5086(2P)	3	Audio	50	0.05	5	0.1	150	500	10	1	0.3
KST5088(1Q)		3	Audio	30	0.05	5	0.1	300	900	10	1	0.5
	KST5087(2Q)	2	Audio	50	0.05	5	0.1	250	800	10	1	0.3
KST5089(1R)		2	Audio	25	0.05	5	0.1	400	1200	10	1	0.5

1.2.2 TO-92S Type Transistors

Device and Polarity		NF (dB)		V_{CEO}	I_C	Condition		h_{FE}		Condition		$V_{CE}(sat)$	Condition		f_T(MHz)	
NPN	PNP	TYP	Condition Frequency	(V)	(A)	V_{CE} (V)	I_C (mA)	MIN	MAX	I_C (mA)	I_B (mA)	MAX	V_{CE} (V)	I_C (mA)	MIN	TYP
KSA1175		6	Audio	50	0.15	6	1	40	700	100	10	0.3	6	10		180
KSC2785		4	Audio	50	0.15	6	1	40	700	100	10	0.3	6	10		300

1.2.3 TO-92 Type Transistors

Device and Polarity		NF (dB)				Condition		h_{FE}		Condition		$V_{CE}(sat)$
NPN	PNP	TYP	Condition Frequency	V_{CEO} (V)	I_C (A)	V_{CE} (V)	I_C (mA)	MIN	MAX	I_C (mA)	I_B (mA)	MAX
2N6428		6	Audio	50	0.2	5	0.1	250	650	100	5	0.6
2N4123		6	Audio	30	0.2	1	2	50	150	50	5	0.3
	2N4125	5	Audio	30	0.2	1	2	50	150	50	5	0.4
2N4124		5	Audio	25	0.2	1	2	120	360	50	5	0.3
KSC945	KSA733	4	Audio	50	0.15	6	1	40	700	100	10	0.3
	2N4126	4	Audio	25	0.2	1	2	120	360	50	5	0.4
	2N5086	3	Audio	50	0.05	5	0.1	150	500	10	1	0.3
2N5088		3	Audio	30	0.05	5	0.1	300	900	10	1	0.5
KSP6520		3	Audio	25	0.1	10	2	200	400	50	5	0.5
KSP6521		3	Audio	25	0.1	10	2	300	600	50	5	0.5
	KSP4250A	2	Audio	60		5	0.1	250	700	10	0.5	0.25
	2N5087	2	Audio	50	0.05	5	0.1	250	800	10	1	0.3
2N5089		2	Audio	25	0.05	5	0.1	400	1200	10	1	0.5
2N6428A		*4	Audio	50	0.2	5	0.1	250	650	100	5	0.6
2N5210		*2	Audio	50	0.05	5	0.1	200	600	10	1	0.7
2N5209		*2	Audio	50	0.05	5	0.1	100	300	10	1	0.7
KSP8097		*2	Audio	40	0.2	5	0.1	250	700			
KSC1222	KSA640	**40	Audio	45	0.05	3	0.5	120	1000	20	2	0.3
KSC900		**30	Audio	25	0.05	3	0.5	120	1000	20	2	0.2

Audio = 10Hz to 15.7KHz
* = MAX, ** = Noise Level

1-3. RF/VHF/UHF Amplifier Transistors

1-3-1. SOT-23 Type Transistors

Device	Condition		f_T (MHz)		C_{OB} (pF)	V_{CEO}	G_{PE} (dB)	Condition		h_{FE}		NF(dB)		I_{AGC}	Condition Gain Reduction (dB)
NPN	V_{CE} (V)	I_C (mA)	MIN	TYP	MAX	(V)	MIN	V_{CE} (V)	I_C (mA)	MIN	MAX	MAX	Condition f (MHz)	(mA) MAX	
KSC2734(H8Z)	10	10	1400	3500	1.5	12		10	5	20	200				
KSC3120(H9Z)	10	2	1500	2400	#0.9	15	$12	10	5	40	200	*8	800		
KSC2759(H6X)	10	5	1250	2000	1.3	14	&10	10	5	40	180				
KST5179	6	5	900	2000	@1	12	15	1	3	25	250	4.5	200		
KSC2757(H3X)	10	5	800	1100	1.5	15		10	5	60	240				
KSC2758(H4Z)	10	3	750	1000	0.8	25	14	10	3	60	240	4.5	900	11	30
KST10(3E)	10	4	650		@0.7	25		10	4	60					
KSC2756(H2X)	10	5	500	850	#0.5	20	$15	10	5	60	240	*6.5	200		
KST24(3A)	10	8	400	620	@0.36	30	$19	10	8	30					
KSC2755(H1X)	10	3	400	600	#0.5	30	20	10	3	60	240	3	200	12	30
KSC2223(H5X)	6	1	400	600	*1	20		6	1	40	180	*3	100		
KSC2715(B1X)	10	1	100		3.2	30	27	12	2	40	240				

1.3.2 TO-92S Type Transistors

Devce	Condition		f_T(MHz)		C_{OB} (pF)	V_{CEO}	G_{PE} (dB)	Condition		h_{FE}			N_F(dB)	Condition
(NPN)	V_{CE} (V)	I_C (mA)	MIN	TYP	MAX	(V)	MIN	V_{CE} (V)	I_C (mA)	MIN	TYP	MAX	MAX	f_T(MHz)
KSC2669	10	1	100	250	3.2	30		12	2	40		240		
KSC2786	6	1	400	600	*1.2	20	18	6	1	40		240	5	100
KSC2787	6	1	150	300	2.5	30		6	1	40		240		

1-3-2 TO-92 Type Transistors

Device	Condition		f_T (MHz)		C_{OB} (pF)	V_{CEO}	G_{PE} (dB)	Condition		h_{FE}		NF(dB)		I_{AGC}	Condition Gain Reduction (dB)
NPN	V_{CE} (V)	I_C (mA)	MIN	TYP	MAX	(V)	MIN	V_{CE} (V)	I_C (mA)	MIN	MAX	MAX	Condition f (MHz)	(mA) MAX	
KSP5179	6	5	900	2000	@1	12	15	1	3	25	250	4.5	200		
KSC1730	10	5	800	1100	1.5	15		10	5	40	240				
KSP17	10	5	800		@0.9	15	*24	10	5	25	250	6	200		
KSC1070***	10	3	750	1000	0.8	25	14	10	3	40	200	4	900	11	30
SS9018	5	5	700	1100	1.7	15		5	1	28	198				
KSP11	10	4	650		@0.7	25		10	4	60					
KSC1395	10	5	600	1100	1.5	15		10	5	40	240				
KSP24	10	8	400	620	@0.36	30	$19	10	8	30					
KSC1393	10	3	400	700	#0.5	30	20	10	2	40	240	3	200	12	30
KSC1394	10	3	400	700	#0.5	30	20	10	2	40	240	3.5	200		
SS9016	5	1	400	620	1.6	20		5	1	28	198	5	100		
KSC1187	10	3	400	700	#0.6	20	20	10	2	40	240				
KSC1188	10	3	400	700	1	20	20	10	2	40	240				
KSC1674	6	1	400	600	*1.5	20	18	6	1	40	240	5	100		
KSC388	12.5	12.5	300		2	25	28	12	12.5	20	200				
KSC1675	6	1	150	300	2.5	20		6	1	40	240				
KSC838	10	1	100	250	3.2	30		12	2	40	240				

* = TYP, # = C_{RE}, @ = C_{CB}, $ = G_{CE}, & = G_{CB}, *** = DISK TYPE TRANSISTOR

1-4. High Voltage Transistors

1-4-1. SOT-23 Type Transistors

Device and Polarity				Condition		h_{FE}		Condition		$V_{CE}(sat)$, $V_{BE}(sat)$(V)		Condition		f_T(MHz)	
NPN	PNP	V_{CEO} (V)	I_C (A)	V_{CE} (V)	I_C (mA)	MIN	MAX	I_C (mA)	I_B (mA)	MAX	MAX	V_{CE} (V)	I_C (mA)	MIN	TYP
KST42(1D)	KST92(2D)	300	0.5	10	30	40		20	2	0.5	0.9	20	10	50	
KST43(1E)	KST93(2E)	200	0.5	10	30	40		20	2	0.5	0.9	20	10	50	
	KST5401(2L)	150	0.5	5	10	60	240	50	5	0.5	1	10	10	100	
KST5550(1F)		140	0.6	5	10	60	250	50	5	0.25	1.2	10	10	100	

1-4.2. TO-92S Type Transistors

Device and polarity				Condition		h_{FE}		Condition		$V_{CE}(sat)$, $V_{BE}(sat)$(V)				Condition		f_T(MHz)	
NPN	PNP	V_{CEO} (V)	I_C (A)	V_{CE} (V)	I_C (mA)	MIN	MAX	I_C (mA)	I_B (mA)	TYP	MAX	TYP	MAX	V_{CE} (V)	I_C (mA)	MIN	TYP
	KSA1174	120	0.05	6	1	200	800	10	1	0.09	0.3			6	1	50	100
KSC2874		120	0.05	6	1	200	1200	10	1	0.07	0.3			6	1	50	110

1-4-3. TO-92 Type Transistors

Device and Polarity				Condition		h_{FE}		Condition		$V_{CE}(sat)$, $V_{BE}(sat)$(V)		Condition		f_T(MHz)	
NPN	PNP	V_{CEO} (V)	I_C (A)	V_{CE} (V)	I_C (mA)	MIN	MAX	I_C (mA)	I_B (mA)	MAX	MAX	V_{CE} (V)	I_C (mA)	MIN	TYP
KSP44		400	0.3	10	10	50	200	10	1	0.5	0.75				
2N6517	2N6520	350	0.5	10	30	30	200	30	3	0.5	0.9	20	10	40	
KSP45		350	0.3	10	10	50	200	10	1	0.5	0.75				
KSP42	KSP92	300	0.5	10	30	40		20	2	0.5	0.9	20	10	50	
2N6516	2N6519	300	0.5	10	30	45	270	30	3	0.5	0.9	20	10	40	
KSC1506		300	0.1	10	10	40	240	50	5	2		30	10	40	80
2N6515	2N6518	250	0.5	10	30	50	300	30	3	0.5	0.9	20	10	40	
KSP43	KSP93	200	0.5	10	30	40		20	2	0.5	0.9	20	10	50	
2N5551		160	0.6	5	10	80	250	50	6	0.2	1	10	10	100	
	KSA709	150	0.7	2	50	40	240	200	20	0.4	1	10	50		50
	2N5401	150	0.6	5	10	60	240	50	5	0.5	1	10	10	100	
KSC1009		140	0.7	2	50	40	240	200	20	0.2	0.86	10	50	30	50
2N5550		140	0.6	5	10	60	250	50	5	0.25	1.2	10	10	100	
	2N5400	120	0.6	5	10	40	180	50	5	0.5	1	10	10	100	
KSP01		120	0.15	5	10	50	300	50	5	0.3	1.4	10	10	60	
KSC1845	KSA992	120	0.05	6	1	200	800	10	1	0.3		6	1	50	100
	KSP51	100	0.6	5	50	40	250	50	5	0.3	1.2	10	10	60	
KSA1625		400	0.5	5	0.1	30	200	100	10	1	1.2				

1-4-4. TO-92L Type Transistors

Device and Polarity				Condition		h_{FE}		Condition		$V_{CE}(sat)$, $V_{BE}(sat)$(V)		Condition		f_T(MHz)	
NPN	PNP	V_{CEO} (V)	I_C (A)	V_{CE} (V)	I_C (mA)	MIN	MAX	I_C (mA)	I_B (mA)	MAX	MAX	V_{CE} (V)	I_C (mA)	MIN	TYP
KSC2340		350	0.1	10	20	30	150	10	1	0.5	10	20	50		
KSC2330		300	0.1	10	20	40	240	10	1	0.5		30	10		50
KSC2383	KSA1013	160	1	5	200	60	320	500	50	1.5		5	200	15	50
KSC2310	KSA910	150	0.05	5	10	40	240	10	1	0.8		30	10		100
KSC2316	KSA916	120	0.8	5	100	80	240	500	50	1		5	100		120

1-4-5. SOT-89 Type Transistors

Device and Polarity				Condition		h_{FE}		Condition		$V_{CE}(sat)$, $V_{BE}(sat)$(V)		Condition		f_T(MHz)	
NPN	PNP	V_{CEO} (V)	I_C (A)	V_{CE} (V)	I_C (mA)	MIN	MAX	I_C (mA)	I_B (mA)	MAX	MAX	V_{CE} (V)	I_C (mA)	MIN	TYP
KSC2880	KSA1200	150	0.05	5	10	70	240	10	1	0.8		30	10		120
KSC2881	KSA1201	120	0.8	5	100	80	240	500	50	1		5	100		120

1-5. Darlington Transistors

1-5-1. SOT-23 Type Transistors

Device and Polarity		V_{CEO}	I_C	Condition		h_{FE}		Condition		$V_{CE}(sat)$, $V_{BE}(sat)$(V)		Condition		f_T(MHz)	
NPN	PNP	(V)	(A)	V_{CE} (V)	I_C (mA)	MIN	MAX	I_C (mA)	I_B (mA)	MAX	MAX	V_{CE} (V)	I_C (mA)	MIN	TYP
KST13(1M)		30	0.3	5	100	10K		100	0.1	1.5		5	10	125	
KST14(1N)		30	0.3	5	100	10K		100	0.1	1.5		5	10	125	
	KST63(2U)	30	0.5	5	100	10K		100	0.1	1.5	5	10	125		
	KST64(2V)	30	0.5	5	100	10K		100	0.1	1.5	5	10	125		

1-5-2. TO-92 Type Transistors

Device and Polarity		V_{CEO}	I_C	Condition		h_{FE}		Condition		$V_{CE}(sat)$, $V_{BE}(sat)$(V)		Condition		f_T(MHz)	
NPN	PNP	(V)	(A)	V_{CE} (V)	I_C (mA)	MIN	MAX	I_C (mA)	I_B (mA)	MAX	MAX	V_{CE} (V)	I_C (mA)	MIN	TYP
KSP27		60	0.5	5	100	10K		100	0.1	1.5					
	KSP77	60	0.5	5	100	10K		100	0.1	1.5					
KSP26		50	0.5	5	100	10K		100	0.1	1.5					
	KSP76	50	0.5	5	100	10K		100	0.1	1.5					
	KSP75	40	0.5	5	100	10K		100	0.1	1.5					
KSP25		40	0.5	5	100	10K		100	0.1	1.5					
KSP14	KSP64	30	0.5	5	100	10K		100	0.1	1.5		5	10	125	
KSP13	KSP63	30	0.5	5	100	20K		100	0.1	1.5		5	10	125	
KSP12	KSP62	20	0.5	5	10	20K		10	0.01	1					

1-6. Digital Transistors

1-6-1. SOT-23 Type Transistors

Device and Polarity		R1	R2	V_{CEO}	I_C	Condition		h_{FE}		Condition		$V_{CE}(sat)$(V)		Condition		f_T(MHz)
NPN	PNP	KΩ	KΩ	(V)	(mA)	V_{CE} (V)	I_C (mA)	MIN	MAX	I_C (mA)	I_B (mA)	TYP	MAX	V_{CE} (V)	I_C (mA)	TYP
KSR1101	KSR2101	4.7	4.7	50	100	5	10	20		10	0.5	0.1	0.3	10	5	250/200
KSR1102	KSR2102	10	10	50	100	5	4	30		10	0.5	0.1	0.3	10	5	250/200
KSR1103	KSR2103	22	22	50	100	5	5	56		10	0.5	0.1	0.3	10	5	250/200
KSR1104	KSR2104	47	47	50	100	5	5	68		10	0.5	0.1	0.3	10	5	250/200
KSR1105	KSR2105	4.7	10	50	100	5	5	30		10	0.5	0.1	0.3	10	5	250/200
KSR1106	KSR2106	10	47	50	100	5	5	68		10	0.5	0.1	0.3	10	5	250/200
KSR1107	KSR2107	22	47	50	100	5	5	68		10	0.5	0.1	0.3	10	5	250/200
KSR1108	KSR2108	47	22	50	100	5	5	56		10	0.5	0.1	0.3	10	5	250/200
KSR1109	KSR2109	4.7		40	100	5	5	100	600	10	1	0.1	0.3	10	5	250/200
KSR1110	KSR2110	10		40	100	5	1	100	600	10	1	0.1	0.3	10	5	250/200
KSR1111	KSR2111	22		40	100	5	1	100	600	10	1	0.1	0.3	10	5	250/200
KSR1112	KSR2112	47		40	100	5	1	100	600	10	1	0.1	0.3	10	5	250/200
KSR1113	KSR2113	2.2	47	50	100	5	5	68		10	0.5	0.1	0.3	10	5	250/200
KSR1114	KSR2114	4.7	47	50	100	5	5	68		10	0.5	0.1	0.3	10	5	250/200

1.7 JUNCTION FETS

1.7.1 SOT-23 Type J-FET.

DEVICE	V_{GDO} (V)	I_G (mA)	P_D (mW)	I_{DSS} (mA) MIN	I_{DSS} (mA) MAX	V_{DS} (V)	g_m (mS) MIN	g_m (mS) TYP	V_{DS} (V)	Condition V_{DS} (V)	Condition I_D (μA)	$V_{GS(OFF)}$ (V) MIN	$V_{GS(OFF)}$ (V) MAX
KSK211	18	10	200	1	10	10		9	10	10	1	0.4	4

1.7.2 TO-92S Type J-FET

DEVICE	V_{GDO} (V)	I_G (mA)	P_D (mW)	I_{DSS} (mA) MIN	I_{DSS} (mA) MAX	V_{DS} (V)	g_m (mS) MIN	g_m (mS) TYP	V_{DS} (V)	Condition V_{DS} (V)	Condition I_D (μA)	$V_{GS(OFF)}$ (V) MIN	$V_{GS(OFF)}$ (V) MAX
KSK161	18	10	200	1	10	10		9	10	10	1	0.4	4
KSK596	20	10	100	0.1	0.8	5				5	1		1.5

1.7.3 TO-92 Type J-FET

DEVICE	V_{GDO} (V)	I_G (mA)	P_D (mW)	I_{DSS} (mA) MIN	I_{DSS} (mA) MAX	V_{DS} (V)	g_m (mS) MIN	g_m (mS) TYP	V_{DS} (V)	Condition V_{DS} (V)	Condition I_D (μA)	$V_{GS(OFF)}$ (V) MIN	$V_{GS(OFF)}$ (V) MAX
KSK30	50	10	100	0.3	6.5	10	1.2		10	10	0.1	0.4	5
KSK117	50	10	300	0.6	14	10	4	15	10	10	0.1	0.2	1.5

1.7.4 SOT-143 Type MOS FET (Dual Gate)

DEVICE	V_{DS} (V)	I_D (mA)	P_D (mW)	I_{DSS} (mA) MIN	I_{DSS} (mA) MAX	V_{DS} (V)	g_m (mS) MIN	g_m (mS) TYP	C_{ie} (pF) TYP	C_{ie} (pF) MAX	C_{rs} (pF) TYP	C_{rs} (pF) MAX	NF (dB) (200MHz) TYP	NF (dB) (200MHz) MAX
KSK5043	15	30	150	0	6	6	13	20	4.25	5.5	0.03	0.05	1.4	2.8

2. POWER TRANSISTORS

2-1. General Purpose Transistors

2.1.1 TO-126 Type Transistors

I_C	V_{CEO}	Device Type		Condition		h_{FE}		Condition		V_{CE}(sat)(V)		Condition		f_T(MHz)		P_C
(A)	(V)	NPN	PNP	V_{CE} (V)	I_C (A)	MIN	MAX	I_C (A)	I_B (A)	TYP	MAX	V_{CE} (V)	I_C (A)	MIN	TYP	(W)
0.1	180	KSC2682	KSA1142	5	0.01	100	320	0.05	0.005	0.16	0.5	10	0.02		180	8
	200	KSC3502		10	0.01	40	320	0.02	0.002		0.6	30	0.01		150	5
	300	KSC3503	KSA1381	10	0.01	40	320	0.02	0.002		0.6	30	0.01		150	7
0.1	200		KSA1406	10	0.01	40	320	0.03	0.003		0.6	30	0.03		400	7
0.2	120	KSC3953		10	0.01	40	320	0.03	0.003		1.0	10	0.05		400	80
0.1	250	KSC2258		20	0.04	40		0.05	0.005		1.2	10	0.01		100	4
0.1	300	KSC2258A		20	0.04	40		0.05	0.005		1.2	10	0.01		100	4
0.15	200	KSC5036		10	0.01	40	320	0.05	0.005		0.6	30	0.05		400	7
0.2	300	KSC2688		10	0.01	40	250	0.05	0.005		1.5	30	0.01	50	80	10
0.3	120	KSC5035		10	0.05	40	320	0.07	0.007		0.6	10	0.05		500	8
0.5	60	KSC5034		10	0.05	40	320	0.1	0.01		0.6	10	0.01		800	10
	250	BD157		10	0.05	30	240	0.25	0.025		2.5					20
	300	BD158		10	0.05	30	240	0.25	0.025		2.5					20
	300	KSE340	KSE350	10	0.05	30	240									20
	350	BD159		10	0.05	30	240	0.25	0.025		2.5					20
1.2	120	KSC2690	KSA1220	5	0.3	60	320	1	0.2	0.4	0.7	5	0.2		175	20
	160	KSC2690A	KSA1220A	5	0.3	60	320	1	0.2	0.4	0.7	5	0.2		11	20
1.5	45	BD135	BD136	2	0.15	40	250	0.5	0.05		0.5					13
	60	BD137	BD138	2	0.15	40	160	0.5	0.05		0.5					13
	80	BD139	BD140	2	0.15	40	160	0.5	0.05		0.5					13
2	45	BD375	BD376	2	0.15	40	375	1	0.1		1.0					25
	45	BD233	BD234	2	1	25		1	0.1		0.6	10	0.25	3		25
	60	BD377	BD378	2	0.15	40	375	1	0.1		1.0					25
	60	BD235	BD236	2	1	25		1	0.1		0.6	10	0.25	3		25
	80	BD379	BD380	2	0.15	40	375	1	0.1		1.0					25
	80	BD237	BD238	2	1	25		1	0.1		0.6	10	0.25	3		25
3	30	KSD882	KSB772	2	1	60	400	2	0.2	0.3	0.5	5	0.1		80	10
	40	KSE180	KSE170	1	0.1	50	250	3	0.6		1.7	10	0.1	50		12.5
	45	KSD794	KSB744	5	0.5	60	320	1.5	0.15	0.5	2	5	0.1		45	10
	45	BD175	BD176	2	0.15	40		1	0.1		0.8	10	0.25	3		30
	60	KSD794A	KSB744A	5	0.5	60		1.5		0.5	2	5	0.1		45	10
		KSE181	KSE171	1	0.1	50	250	3	0.6		1.7	10	0.1	50		12.5
	60	BD177	BD178	2	0.15	40		1	0.1		0.8	10	0.25	3		30
	80	KSE182	KSE172	1	0.1	50	250	3	0.6		1.7	10	0.1	50		12.5
	80	BD179	BD180	2	0.15	40		1	0.1		0.8	10	0.25	3		30
4	22	BD433	BD434	1	0.5	85		2	0.2		0.5	1	0.25	3		36
	32	BD435	BD436	1	0.5	85		2	0.2		0.5	1	0.2	3		36
	45	BD437	BD438	1	0.5	85		2	0.2		0.6	1	0.25	3		36
	60	BD439	BD440	1	0.5	40		2	0.2		0.8	1	0.25	3		36
	80	BD441	BD442	1	0.5	40		2	0.2		0.8	1	0.25	3		36
5	25	KSE200	KSE210	1	2	45	180	2	0.2		0.75	10	0.1	65		15
	60	KSD1691	KSB1151	1	2	100	400	2	0.2	0.1	0.3					20

2.1.2 D-PACK Type Transistors

I_C	V_{CEO}	Device Type		Condition		h_{FE}		Condition		$V_{CE}(sat)(V)$		Condition		$f_T(MHz)$		P_C
(A)	(V)	NPN	PNP	V_{CE} (V)	I_C (A)	MIN	MAX	I_C (A)	I_B (A)	TYP	MAX	V_{CE} (V)	I_C (A)	MIN	TYP	(W)
0.5	300	KSH340	KSH350	10	0.05	30	240									15
1	40	KSH29	KSH30	4	1	15	75	1	0.125		0.7	10	0.2		3	15
	100	KSH29C	KSH30C	4	1	15	75	1	0.125		0.7	10	0.2		3	15
	250	KSH47		10	0.3	30	150	1	0.2		1	10	0.2		10	15
	400	KSH50		10	0.3	30	150	1	0.2		1	10	0.2		10	15
2	400	KSC3233		5	0.1	20		1	0.2		1					20
3	40	KSH31	KSH32	4	3	10	50	3	0.375		1.2	10	0.5		3	15
	60	KSD1221	KSB906	5	0.5	60	300	3	0.3	0.4	1	5	0.5		3	20
	100	KSH31C	KSH32C	4	3	10	50	3	0.375		1.2	10	0.5		3	15
5	25	KSH200	MD210	1	0.5	70		0.5	0.05		0.3	10	0.1	65		12.5
6	100	KSH41C	KSH42C	4	3	15	75	6	0.6		1.5	10	0.5		3	20
8	80	KSH44H11	KSH45H11	1	2	60		8	0.4		1	10	0.5		50	20
10	60	KSH3055	KSH2955	4	4	20	100	4	0.4		1.1	10	0.5	2		20

2.1.3 I-PACK Type Transistors

I_C	V_{CEO}	Device Type		Condition		h_{FE}		Condition		$V_{CE}(sat)(V)$		Condition		$f_T(MHz)$		P_C
(A)	(V)	NPN	PNP	V_{CE} (V)	I_C (A)	MIN	MAX	I_C (A)	I_B (A)	TYP	MAX	V_{CE} (V)	I_C (A)	MIN	TYP	(W)
0.5	400	KSC5054	KSA5055	5	0.05	20	80	0.3	0.06		1					10
2	50	KSC3076	KSA1241	2	0.5	70	240	1	0.05		0.5	2	0.5		100	10
3	30	KSC3073	KSA1243	2	0.5	70	240	2	0.2	0.3	0.8	2	0.5		100	10
5	20		KSA1242	2	0.5	100	320	4	0.1		1	2	0.5		180	10
	50	KSC3074	KSA1244	1	1	70	240	3	0.15		0.5	4	1		60	20

2.1.4 TO-220 Type Transistors

I_C	V_{CEO}	Device Type		Condition		h_{FE}		Condition		$V_{CE}(sat)(V)$		Condition		$f_T(MHz)$		P_C
(A)	(V)	NPN	PNP	V_{CE} (V)	I_C (A)	MIN	MAX	I_C (A)	I_B (A)	TYP	MAX	V_{CE} (V)	I_C (A)	MIN	TYP	(W)
0.2	300	KSC1507		1	0.01	40	240	0.05	0.005		2	30	0.01	40	80	15
1	40	TIP29	TIP30	4	1	15	75	1	0.125		0.7	10	0.2	3		30
	60	TIP29A	TIP30A	4	1	15	75	1	0.125		0.7	10	0.2	3		30
	80	TIP29B	TIP30B	4	1	15	75	1	0.125		0.7	10	0.2	3		30
	100	TIP29C	TIP30C	4	1	15	75	1	0.125		0.7	10	0.2	3		30
	250	TIP47		10	0.3	30	150	1	0.2		0.1	10	0.2	10		40
	300	TIP48		10	0.3	30	150	1	0.2		0.1	10	0.2	10		40
	350	TIP49		10	0.3	30	150	1	0.2		0.1	10	0.2	10		40
	400	TIP50		10	0.3	30	150	1	0.2		0.1	10	0.2	10		40
1.5	150	KSC2073	KSA940	10	0.5	40	140	0.5	0.05		1.5	10	0.5	4		25
2	45	BD239	BD240	4	1	15		1	0.1		0.7	10	0.2	3		30
	60	BD239A	BD240A	4	1	15		1	0.1		0.7	10	0.2	3		30
	80	BD239B	BD240B	4	1	15		1	0.1		0.7	10	0.2	3		30
	100	BD239C	BD240C	4	1	15		1	0.1		0.7	10	0.2	3		30
	150	KSD401	KSB546	10	0.4	40	240					10	0.4		5	25
3	30	KSC1173	KSA473	2	0.5	70	240	2	0.2	0.3	0.8	2	0.5		100	10
	40	TIP31	TIP32	4	3	10	50	3	0.375		1.2	10	0.5	3		40
	45	BD241	BD242	4	3	10		3	0.6		1.2	10	0.5	3		40
	55	KSD288	KSA614	5	0.5	40	240	1	0.1	0.15	0.5					25

2.1.5 TO-220 Type Transistors

I_C	V_{CEO}	Device Type		Condition		h_{FE}		Condition		$V_{CE}(sat)(V)$		Condition		$f_T(MHz)$		P_C
(A)	(V)	NPN	PNP	V_{CE} (V)	I_C (A)	MIN	MAX	I_C (A)	I_B (A)	TYP	MAX	V_{CE} (V)	I_C (A)	MIN	TYP	(W)
3	60	TIP31A	TIP32A	4	3	10	50	3	0.375		1.2	10	0.5	3		40
		KSD880	KSB834	5	0.5	60	200	3	0.3	0.5		5	0.5		9	30
		*KSC1983		4	0.5	500		2	0.05		1	12	0.2		15	30
	60	BD241A	BD242A	4	3	10		3	0.6		1.2	10	0.5	3		40
	80	TIP31B	TIP32B	4	3	10	50	3	0.375		1.2	10	0.5	3		40
	80	BD241B	BD242B	4	3	10		3	0.6		1.2	10	0.5	3		40
	100	TIP31C	TIP32C	4	3	10	50	3	0.375		1.2	10	0.5	3		40
	100	BD241C	BD242C	4	3	10		3	0.6		1.2	10	0.5	3		40
4	60	KSC2233		5	1	30	150	4	0.4		1	5	0.5		10	40
	80	KSD526	KSB595	5	0.5	40	240	3	0.3	1.0	1.7	5	0.5	3		30
5	60	KSD73		10	1	70	240	5	0.5		2	10	0.3		20	30
	70	KSD362		5	5	20	140	5	0.5		1	5	0.5		10	40
	100	KSC2517		5	2	40	200	3	0.3		0.6					30
6	40	TIP41	TIP42	4	3	15	75	6	0.6		1.5	10	0.5	3		65
	45	BD243	BD244	4	3	15		6	1		1.5	10	0.5	3		65
	60	BD243A	BD244A	4	3	15		6	1		1.5	10	0.5	3		65
	60	TIP41A	TIP42A	4	3	15	75	6	0.6		1.5	10	0.5	3		65
	80	BD243B	BD244B	4	3	15		6	1		1.5	10	0.5	3		65
	80	TIP41B	TIP42B	4	3	15	75	6	0.6		1.5	10	0.5	3		65
	100	BD243C	BD244C	4	3	15		6	1		1.5	10	0.5	3		65
	100	TIP41C	TIP42C	4	3	15	75	6	0.6		1.5	10	0.5	3		65
	120	KSD363		5	1	40	240	1	0.1		1	5	0.5		10	40
7	60	KSD568	KSB707	1	3	40	200	5	0.5		0.5					40
	80	KSD569	KSB708	1	3	40	200	5	0.5		0.5					40
	100	KSC2334	KSA1010	5	3	40	200	5	0.5		0.6					40
	150	BU407						5	0.5		1	10	0.5	10		60
		BU407H						5	0.8		1	10	0.5	10		
	200	BU406						5	0.5		1	10	5	10		
		BU406H						5	0.8		1	10	5	10		60
		BU408						6	1.2		1	10	5	10		
8	45	BD533	BD534	2	2	30	100	2	0.2		0.8	5	0.5	3		50
	60	BD535	BD536	2	2	30	100	2	0.2		0.8	5	0.5	3		50
	80	BD537	BD538	2	2	30	100	2	0.2		0.8	5	0.5	3		50
10	60	KSE3055T	KSE2955T	4	4	20	100	4	0.4		1.1	10	0.5	2		75
	80	KSE44H	KSE45H	1	4	20		8	0.4		1	10	0.5		40	50

* : high ß

2.1.6 TO-220(F) Type Transistors

I_C	V_{CEO}	Device Type		Condition		h_{FE}		Condition		$V_{CE}(sat)(V)$		Condition		$f_T(MHz)$		P_C
(A)	(V)	NPN	PNP	V_{CE} (V)	I_C (A)	MIN	MAX	I_C (A)	I_B (A)	TYP	MAX	V_{CE} (V)	I_C (A)	MIN	TYP	(W)
1.5	150	KSC3296	KSA1304	10	0.5	40	75	0.5	0.05		1.5	10	0.5		4	20
3	55		KSA1614	5	0.5	40	240	1	0.1	0.15	0.5					
	60	KSD1406	KSB1015	5	0.5	60	200	3	0.3	0.5	1	5	0.5		9	25
	60	KSD2012	KSB1366	5	0.5	100	320	2	0.2	0.5	1	5	0.5		9	25
	60	*KSD1273		4	0.5	500	2500	2	0.05		1	12	0.2		30	40
	60	*KSD1944		4	0.5	400	2000	2	0.05		1					30
4	80	KSD1408	KSB1017	5	0.5	40	240	3	0.3	1	1.7	5	0.5		9	25
5	70	KSD1362		5	5	20	140	5	0.5		1	5	0.5		10	20
7	60	KSD1588	KSB1097	1	3	40	200	5	0.5		0.5					30
	400	KSC3158		5	1	20	80	3	0.6		1					40

*: high ß

2.1.7 TO-3P Type Transistors

I_C	V_{CEO}	Device Type		Condition		h_{FE}		Condition		$V_{CE}(sat)(V)$		Condition		$f_T(MHz)$		P_C
(A)	(V)	NPN	PNP	V_{CE} (V)	I_C (A)	MIN	MAX	I_C (A)	I_B (A)	TYP	MAX	V_{CE} (V)	I_C (A)	MIN	TYP	(W)
12	140	KSD1047	KSB817	5	1	60	200	5	0.5	0.6	2.5	5	1		15	100

2-2. Darlington Transistors

2.2.1 TO-126 Type Transistors

I_C	V_{CEO}	Device Type		Condition		h_{FE}		Condition		$V_{CE}(sat)(V)$		Condition		$f_T(MHz)$		P_C
(A)	(V)	NPN	PNP	V_{CE} (V)	I_C (A)	MIN	MAX	I_C (A)	I_B (A)	TYP	MAX	V_{CE} (V)	I_C (A)	MIN	TYP	(W)
1.5	60	KSD985	KSB794	2	1	2K	3K	1A	0.001		1.5					10
	80	KSD986	KSB795	2	1	2K	3K	1A	0.001		1.5					10
3	60	KSD1693	KSB1150	2	1.5	2K	20K	1.5	0.0015	0.9	1.2					15
	100	KSD1692	KSB1149	2	1.5	2K	20K	1.5	0.0015	0.9	1.2					15
4	60	KSE800	KSE700	3	1.5	0.75K		1.5	0.03		2.5					40
		KSE801	KSE701	3	2	0.75K		2	0.04		2.8					
	80	KSE802	KSE702	3	1.5	0.75K		1.5	0.03		2.5					40
		KSE803	KSE703	3	2	0.75K		2	0.04		2.8					

2.2.2 D-Pack Type Transistors

I_C	V_{CEO}	Device Type		Condition		h_{FE}		Condition		$V_{CE}(sat)(V)$		Condition		$f_T(MHz)$		P_C
(A)	(V)	NPW	PWP	V_{CE} (V)	I_C (A)	MIN	MAX	I_C (A)	I_B (A)	TYP	MAX	V_{CE} (V)	I_C (A)	MIN	TYP	(W)
2	100	KSH112	KSH117	3	2	1K	12K	2	0.008		2	10	0.75	25		20
3	40	KSD1222	KSB907	2	1	2K		2	0.004		1.5					15
8	100	KSH122	KSH127	4	4	1K	12K	4	0.016		2					20

2.2.3 TO-220 Type Transistors

I_C	V_{CEO}	Device Type		Condition		h_{FE}		Condition		V_{CE}(sat)(V)		Condition		f_T(MHz)		P_C
(A)	(V)	NPN	PNP	V_{CE} (V)	I_C (A)	MIN	MAX	I_C (A)	I_B (A)	TYP	MAX	V_{CE} (V)	I_C (A)	MIN	TYP	(W)
2	60	TIP110	TIP115	4	2	0.5K		2	0.008		2.5					50
	80	TIP111	TIP116	4	2	0.5K		2	0.008		2.5					50
	100	TIP112	TIP117	4	2	0.5K		2	0.008		2.5					50
4	275	KSD5018		5	3			2	0.005		1.5					50
5	60	TIP120	TIP125	3	3	1K		3	0.012		2					65
	80	TIP121	TIP126	3	3	1K		3	0.012		2					65
	100	TIP122	TIP127	3	3	1K		3	0.012		2					65
		KSD560	KSB601	2	3	2K	15K	3	0.003		1.5					30
6	45	BDW23	BDW24	3	2	0.75K	20K	2	0.008		2					50
	60	BDW23C	BDW24C	3	2	0.75K	20K	2	0.008		2					50
	80	BDW23B	BDW24B	3	2	0.75K	20K	2	0.008		2					50
	100	BDW23C	BDW24C	3	2	0.75K	20K	2	0.008		2					50
8	45	BDX53	BDX54	3	3	0.75K		3	0.012		2.5					60
	60	BDX53A	BDX54A	3	3	0.75K		3	0.012		2.5					60
	60	TIP100	TIP105	4	3	1K	20K	3	0.006		2					80
	80	BDX53B	BDX54B	3	3	0.75K		3	0.012		2.5					60
	80	TIP101	TIP106	4	3	1K	20K	3	0.006		2					80
	100	BDX53C	BDX54C	3	3	0.75K		3	0.012		2.5					60
	100	TIP102	TIP107	4	3	1K	20K	3	0.006		2					80
	150	BU807						5	0.05		1.5					60
	200	BU806						5	0.05		1.5					60
10	45	BDX33	BDX34	3	4	0.75K		4	0.008		2.5					70
	60	BDX33A	BDX34A	3	4	0.75K		4	0.008		2.5					70
	80	BDX33B	BDX34B	3	3	0.75K		3	0.006		2.5					70
	80	TIP141T	TIP146T	4	5	1K		5	0.01		2					80
	100	BDX33C	BDX34C	3	3	0.75K		3	0.006		2.5					70
	100	TIP142T	TIP147T	4	5	1K		5	0.01		2					80
12	45	BDW93	BDW94	3	5	0.754	20K	5	0.02		2					80
	60	BDW93A	BDW94A	3	5	0.75K	20K	5	0.02		2					80
	80	BDW93B	BDW94B	3	5	0.75K	20K	5	0.02		2					80
	100	BDW93C	BDW94C	3	5	0.75K	20K	5	0.02		2					80

1

2.2.4 TO-220(F) Type Transistors

I_C	V_{CEO}	Device Type		Condition		h_{FE}		Condition		V_{CE}(sat)(V)		Condition		f_T(MHz)		P_C
(A)	(V)	NPN	PNP	V_{CE} (V)	I_C (A)	MIN	MAX	I_C (A)	I_B (A)	TYP	MAX	V_{CE} (V)	I_C (A)	MIN	TYP	(W)
3	40	KSD1413	KSB1023	2	1	2K		2	0.004		1.5					20
5	100	KSD1589	KSB1098	2	3	2K	15K	3	0.003		1.5					20
7	60	KSD1417	KSB1022	3	3	2K	15K	3	0.006	0.95	1.5					30

2.2.5 TO-3P & TO-3P(F) Type Transistors

I_C (A)	V_{CEO} (V)	Device Type		Condition		h_{FE}		Condition $V_{CE(SAT)}$ (V)				Condition f_T (MHz)				P_C (W)	PKG
		NPN	PNP	V_{CE} (V)	I_C (A)	MIN	MAX	I_C (A)	I_B (A)	TYP	MAX	V_{CE} (V)	I_C (A)	MIN	TYP		
10	60	TIP140F	TIP145F	4	5	1K		5	0.01		2					60	TO-3P(F)
		TIP140	TIP145	4	5	1K		5	0.01		2					125	TO-3P
	80	TIP141F	TIP142F	4	5	1K		5	0.01		2					60	TO-3P(F)
		TIP141	TIP142	4	5	1K		5	0.01		2					125	TO-3P
	100	TIP142F	TIP142F	4	5	1K		5	0.01		2					60	TO-3P(F)
		TIP142	TIP147	4	5	1K		5	0.01		2					125	TO-3P
15	50	KSC5047		5	5	80		5	0.12		0.5					100	TO-3P

2-3. Switching Transistors

V_{CEO} (V)	I_C (A)	Device (NPN)	Condition V_{CE} (V)	Condition I_C (A)	h_{FE} MIN	h_{FE} MAX	Condition I_C (A)	Condition I_B (A)	$V_{CE(SAT)}$(V) TYP	$V_{CE(SAT)}$(V) MAX	Switching Time t_{on} MAX (μS)	Switching Time t_{stg} MAX (μS)	Switching Time t_f MAX (μS)	P_C (W)	Package
300	4	KSE13004	5	2	8	40	2	0.5		0.6	0.8	3	0.7	75	TO-220
	8	KSE13006	5	5	5	30	5	1		2	0.8	3	0.7	80	TO-220
	12	KSE13008	5	8	6	30	8	1.6		1.5	0.8	3	0.7	100	TO-220
375	0.5	KSA1156	5	0.01	30	200	0.1	0.01		1	1	4	1	10	TO-126(PNP)
400	0.5	KSC2752	5	0.05	20	80	0.3	0.06		1	1	2.5	1	10	TO-126
	2	KSC2333	5	0.1	20	80	0.5	0.1		1	1	2.5	1	15	TO-220
	4	KSE13005	5	1	10	60	1	0.2		0.5	0.8	3	0.7	75	TO-220
	5	KSC2518	5	0.5	20	80	2	0.4		1	1	2.5	0.7	40	TO-220
	5	KSC5039	5	2	5		3.5	0.7		5	1	3	0.8	85	TO-220
	7	KSC2335	5	1	20	80	3	0.6		1	1	2.5	1	40	TO-220
	8	KSE13007	5	2	8	60	2	0.4		1	0.8	3	0.7	80	TO-220
	12	KSE13009	5	5	8	40	5	1		1	0.8	3	0.7	100	TO-220
	15	KSC2751	5	2	15	80	10	2	0.3	1	1	2.5	0.7	120	TO-3P
500	3	KSC5020	5	0.3	15	50	1.5	0.3		1	0.5	3	0.3	40	TO-220
	4	KSC5022	5	0.3	15	50	1.5	0.3		1	0.5	3	0.3	60	TO-3P
	5	KSC5021	5	0.6	15	50	3	0.6		1	0.5	3	0.3	50	TO-220
	7	KSC5023	5	0.6	15	50	3	0.6		1	0.5	3	0.3	80	TO-3P
	10	KSC5024	5	0.8	15	50	4	0.8		1	0.5	3	0.3	90	TO-3P
	15	KSC5025	5	1.2	15	50	6	1.2		1	0.5	3	0.3	100	TO-3P
800	1.5	KSC5026	5	0.1	10	40	0.75	0.15		2	0.5	3	0.3	40	TO-220
	3	KSC5027	5	0.2	10	40	1.5	0.3		2	0.5	3	0.3	50	TO-220
		KSC5028	5	0.2	10	40	1.5	0.3		2	0.5	3	0.3	80	TO-3P
	4.5	KSC5029	5	0.3	10	40	2	0.4		2	0.5	3	0.3	90	TO-3P
	6	KSC5030	5	0.4	10	40	3	0.6		2	0.5	3	0.3	100	TO-3P
	8	KSC5031	5	0.6	10	40	4	0.8		2	0.5	3	0.3	140	TO-3P
	12	KSC3552	5	0.8	10	40	6	1.2		2	0.5	3	0.3	150	TO-3P

2-4. Horizontal Defelection Output Transistors

2.4.1 TO-3P(F) Type Transistors

V_{CBO} (V)	V_{CEO} (V)	I_C (A)	Device (NPN)	h_{FE} V_{CE} (V)	h_{FE} I_C (A)	h_{FE} MIN	h_{FE} MAX	$V_{CE}(sat)$(V) I_C (A)	$V_{CE}(sat)$(V) I_B (A)	$V_{CE}(sat)$(V) TYP	$V_{CE}(sat)$(V) MAX	Switching Time t_{on} (μS) MAX	Switching Time t_{stg} (μS) MAX	Switching Time t_f (μS) MAX	P_C (W)	Comment
1500	800	2.5	KSD5070	5	0.5	8		2	0.6		8			0.4	50	Built in Damper Diode
		3.5	KSD5071	5	0.5	8		2.5	0.8		8			0.4	50	Built in Damper Diode
		5	KSD5072	5	1	8		4	0.8		5			0.4	60	Built in Damper Diode
		2.5	KSD5074	5	0.5	8		2	0.6		8			0.4	50	
		3.5	KSD5075	5	0.5	8		2.5	0.8		8			0.4	50	
		5	KSD5076	5	1	8		4	0.8		5			0.4	60	

3. QUICK REFERENCE TABLE (APPLICATION)

3.1 Audio Equipment

Application	Package	SOT-23	TO-92	TO-92L	TO-126	TO-220
FM	RM AMP	KSC2223	KSC1674			
	Mix Conv	KSC2223	KSC1674			
	Local Osc	KSC2223	KSC1674/KSC1675			
	IF	KSC2715	KSC838/KSC1676			
AM	RF	KSC1623	KSC945/KSC815			
	Conv Osc	KSC2715	KSC1675/KSC945 KSC838			
	IF	KSC2715	KSC1675/KSC945 KSC838			
Diff. Amp	10W	KSA812/KSC1623	KSA733/KSC945			
	20W	KSA812/KSC1623	KSA733/KSC945			
	25W	KSA812/KSC1623	KSA733/KSC945			
	30W	KSA812/KSC1623	KSA733/KSC945			
	35W	KSA812/KSC1623	KSA733/KSC945			
	40W		KSA992/KSC1845			
	50W		KSA992/KSC1845			
	60W		KSA991/KSC1845			
	80W		KSA992/KSC1845			
	100W		KSA992/KSC1845			
	150W		KSA992/KSC1845			
Pre Driver	20W		KSA954/KSC2003			
	25W		KSA954/KSC2003			
	30W			KSA910/KSC2310		
	35W			KSA910/KSC2310		
	40W			KSA910/KSC2310		
	50W			KSA910/KSC2310		
	60W			KSA910/KSC2310		
	80W			KSA910/KSC2310		
	100W			KSA910/KSC2310	KSA1142/KSC2682	
	150W				KSA1142/KSC2682	
	20W				KSA1142/KSC2682	
Driver	3W		KSA642/KSD227			
	5W		KSA642/KSD227			
	10W		KSA954/KSC2003			
	20W		KSA954/KSC2003			
	25W		KSA954/KSC2003			
	30W		KSA954/KSC2003			
	40W			KSA916/KSC2316		
	50W			KSA916/KSC2316	KSA1220/KSC2690	
	60W				KSA1220/KSC2690	
	80W				KSA1220A/KSC2690A	
Output	3W			KSA928A/KSC2328A		
	5W				KSB772/KSD882	
	10W				KSB744/KSD794	
	20W					KSB834/KSD880 KSA614/KSD288
	25W					KSB596/KSD526
	30W					TIP41C/TIP42C
	35W					TIP41C/TIP42C

1

3.2 Video Equipment

Application			Package	Color TV	B/W TV
Tuner	VHF	RF	SOT-23	KSC2755	KSC2755
			TO-92		KSC1393
		MIX	SOT-23	KSC2756	KSC2756
			TO-92	KSC1393, KSP24	KSC1394, KSP24
		UHF	SOT-23	KSC2757, KSC2759, KSC3120, KST5179	KSC2757, KSC2759, KSC3120, KST5179
			TO-92	KSC1730, KSP5179, KSP10	KSC1730, KSP5179, KSP10
	UHF	RF	SOT-23	KSC2758	KSC2758
		MIX	SOT-23	KSC2758	KSC2758
		UHF	SOT-23	KSC2757, KSC2759, KSC3120, KST5179	KSC2757, KSC2759, KSC3120, KST5179
			TO-92	KSC1730, KSP5179, KSP10	KSC1730, KSP5179, KSP10
Video Chroma	Output		TO-92	KSA643, KSA733	KSA733, KSC945
			TO-92L	KSC2330, KSC2340	KSC2330, KSC2340
			TO-202	KSC1520A	KSC1520A
			TO-126	KSC2688	
			TO-220	KSC1257	KSC1507
Vertical Defelection	OSC		TO-92		KSA733, KSC945
	Driver		TO-92		KSA642, KSA643, KSD227, KSD261
			TO-92L	KSC2310, KSA910	
	Output		TO-92L		KSC2328A, KSA928A
			TO-202		KSC1096, KSA643
			TO-126	KSA1220A, KSC2690A	KSA1220A, KSC2690A, KSB772, KSD882
			TO-220	KSB546, KSD401, KSA940, KSC2073	KSD880, KSD288, KSA614, KSB834
Sound	Output		TO-92		KSD261, KSB564, KSB1116, KSA643, KSD471, KSD1616
			TO-92L	KSC2383, KSA1013	KSC2328A, KSA928A
			TO-126	KSA1220A, KSC2690A	
			TO-220	KSB546, KSD401, KSA940, KSC2073	
AGC			TO-92	KSC945, KSA733	KSC945, KSA733
Sync Separator			TO-92	KSC945, KSA733	KSC945, KSA733
Horizontal Defelection	OSC		TO-92	KSC945, KSA733	KSC945, KSA733
	Driver		TO-92L	KSC2330, KSC2316, KSA916	
	Output		TO-220		KSD362, KSD73
			TO-3PF	KSD5070, KSD5071, KSD5072, KSD5074, KSD5075, KSD5076, BU508AF	
Series Regulator	Error Amp		TO-92		KSA733, KSC945
			TO-92L	KSC2310, KSA910	
	Driver		TO-92		KSA733, KSC945
			TO-92L	KSC2310, KSA910	
			TO-202		KSC1096, KSA634
	Output		TO-126		KSB772, KSD882
			TO-220	KSD560	KSD288, KSD880, KSB834, KSA614
Switching	Driver		TO-92	KSD471A, KSB564A, KSD261, KSA643	KSD471A, KSB564A, KSD261, KSA643

SOT-23 TYPE

V_{CEO} \ Ic	20mA	30mA	50mA	0.1A	0.2A	0.3A	0.5A	0.6A	0.8A	10mA
12V			KST5179							
14V			KSC2734 KSC2759							
15V			KSC3120 KSC2757							
20V	KSC2223	KSC2756		BCW31						(2mA) KSK123
25V	KSC2758		KST5089 KST1009F1-5	KST10	KST4124 KST4126				KSA1298 KSC3265	
30V	KSC2755		KSC2715 KST5088	KST24	KST4123 KST4125	KST13 KST14	KSA1182 KSC2859 KST63 KST64	KST2222		
32A				BCW60A-D BCW61A-D						
35V										
40V				KST1623L3-7 KST20 KST70 KSR1109-12 KSR2109-12	KST3903 KST3904 KST3906			KST2222A KST2907 KST4401 KST4403		
45V				BCW71G-K	KST6429					
50V			KST5086 KST5087	KSA812 KSC1623 KSR1101-8 KSR2101-8 KSR1113/4 KSR2113/4	KST6428					
60V			KST2484				KST05 KST55	KST2907A		
80V							KST06 KST56			
140V								KST5550		
150V							KST5401			
200V							KST43 KST93			
300V							KST42 KST92			

1

TO-92S, TO-92 & TO-92L TYPE (V_{CEO}: 12V ~ 60V)

I_C \ V_{CEO}	12V	15V	20V	25V	30V	35V	40V	45V	50V	60V
20mA		KSC1395	KSK161(10mA) KSK211(10mA) KSC1674 KSC2786	KSC1070	KSC1393 KSC1394				KSK117 (10mA) KSK30 (10mA)	
25mA			SS9016							
30mA			KSC1187 KSC1188		SS9011 KSC838 KSC2669					
50mA	KSP5179	KSC1730 SS9018		KSA542 KSC184 KSC2787 KSC388 KSC900 2N5089	2N5088 KSC1675			KSA640 KSC1222	2N5086 2N5087 2N5209 2N5210	
0.1A		KSP17		KSP5172 KSP6520 KSP6521 KSP11	KSC839 KSC921 KSP24		KSC1330 KSR1009-12 KSR2009-12 KSR1209-12 KSR2209-12	SS9014 SS9015	KSR1201-8 KSR1213/4 KSR2201-8 KSR2213/4 KSR1001-8 KSR2001-8 KSR1013/4 KSR2013/4	
0.15A							KSP4250		KSA1175 KSC2785 KSA733 KSC945	KSP4250A KSP4249
0.2A				2N4124 2N4126	2N4123 2N4125		2N3903 2N3904 2N3905 2N3906 KSP8097	KSA539 KSC815	2N6428 2N6428A	KSA545 KSC853
0.3A				KSC3488 KSA1378 KSA642 KSD227						KSA953 KSC2002
0.5A			KSP12 KSP62 KSA643 KSD261 SS9012 SS9013 KSA1150 KSC2710		KSP13 KSP14 KSP63 KSP64		KSP25 KSP75		KSP26 KSP76	KSP8098 KSP8598 KSP05 KSP55 KSP27 KSP77
0.6A			KSP3706		KSP2222 KSP3703 KSP3704 KSP3705		2N4400 2N4401 2N4402 2N4403 KSP2222A KSP2907			KSP2907A
0.7A				KSB810 KSB811				KSA707 KSC1072		KSA708 KSC1008 KSA931 KSC2331

TO-92S, TO-92 & T-92L TYPE (Continued)

I_C \ V_{CEO}	12V	15V	20V	25V	30V	35V	40V	45V	50V	60V
1A				KSB564A KSB811	KSD1021 KSD471A				KSB1116 KSD1616	KSB116A KSD1616A
1.5A				SS8050 SS8550						
2A	(10V) KSC2500 KSD5019				KSA928A KSC2328A					
5A			KSD5041							

TO-92S, TO-92 & TO-92L Type (V_{CEO}: 80V ~ 400V)

I_C \ V_{CEO}	80V	100V	120V	140V	150V	160V	200V	250V	300V	350V	400V
50mA			KSA992 KSC1845 KSA1174 KSC2874		KSA910 KSC2310						
0.1A									KSC1506 KSC2330	KSC2340	
0.3A	KSA954 KSC2003									KSP45	KSP44 KSP94
0.5A	KSP8099 KSP8599 KSP06 KSP56						KSP43 KSP93	2N6515 2N6518	2N6519 KSP92 2N6516 KSP42	2N6517 2N6520	KSA1625
0.6A			2N5400	2N5550	2N5401	2N5551					
0.7A				KSC1009	KSA709						
0.8A			KSA916 KSC2316								
1A						KSA1013 KSC2383					
1.5A											
2A											

1

SOT-89 Type

I_C \ V_{CEO}	10V	25V	30V	80V	120V	150V
0.05A						KSA1220 KSC2880
0.4A				KSA1202 KSC2882		
0.8A			KSA1204 KSC2884		KSA1201 KSC2881	
1A		KSB798 KSD999				
1.5A			KSA1203 KSC2883			
2A	KSA1314 KSC2982	KSB1121 KSD1621				

D-PACK & I-PACK Type

I_C \ V_{CEO}	25V	30V	40V	50V	60V	80V	100V	150V	250V	300V	400V
0.5A										KSH340 KSH350	KSA5055 KSC5054
1A			KSH29 KSH30				KSH29C KSH30C		KSH47		KSH50
2A				*KSA1241 *KSC3076			KSH112 KSH117	KSB768 KSD1033			KSC3233
3A		*KSA1243 *KSC3073	KSH31 KSH32 KSB907 KSD1222		KSB906 KSD1221		KSH31C KSH32C				
5A	KSH200 KSH210 *KSA1242			*KSA1244 *KSC3074							
6A							KSH41C KSH42C				
8A						KSH44H11 KSH45H11	KSH122 KSH127				
10A					KSH2955 KSH3055						

* : I-PAK (In Case of I-PAK Attach Suffix "-I")

TO-126 Type

V_{CEO} / I_C	25V	30V	40V	45V	60V	80V	100V	120V	160V	180V	200V	250V	300V	400V
0.1A										KSC2682 KSA1142	KSC3502 KSA1406	KSC2258	KSC3503 KSA1381	
0.15A											KSC5036			
0.2A								KSC3953					KSC2688	
0.3A								KSC5035						
0.5A					KSC5034							BD157	KSE340 KSE350 BD158 BD159	KSC2752 KSA1156
1.2A								KSC2690 KSA1220	KSC2690A KSA1220A					
1.5A				BD135 BD136	KSD985 KSB794 BD137 BD138	KSD986 KSB795 BD139 BD140								
2.0A				BD233 BD378 BD375 BD376	BD377 BD237 BD235 BD236	BD379 BD237 BD238 BD380								
3.0A		KSD882 KSB772	KSE170 KSE180	KSD794 KSB744 BD175 BD176	KSD794A KSB744A KSE171 KSE181 KSD1693 KSB1150 BD177 BD178	KSE172 KSE182 BD179 BD180	KSD1692 KSB1149							
4.0A	BD433 BD434	BD435 BD436		BD437 BD438 BD675 BD675A BD676 BD676A	KSE700 KSE701 KSE800 KSE801 BD677 BD677A BD678 BD678A BD439 BD440	KSE702 KSE703 KSE802 KSE803 BD679 BD679A BD680 BD680A BD441 BD442	BD681 BD682	BD683 BD684						
5.0A	KSE200 KSE210				KSD1691 KSB1151									

1

TO-220 TYPE

V_{CEO} / I_C	30V	40V	45V	55V	60V	70V	80V	100V	120V	150V	200V	250V	300V	350V	400V	450V	500V	800V
0.2													KSC1507					
1		TIP29 TIP30			TIP29A TIP30A		TIP29B TIP30B	TIP29C TIP30C				TIP47	TIP48	TIP49	TIP50			
1.5										KSC2073 KSA940								KSC5026
2A			BD239 BD240		TIP110 TIP115 BD239A BD240A		TIP111 TIP116 BD239B BD240B	TIP112 TIP117 BD239C BD240C		KSD401 KSB546					KSC2333 BUX84			
3A	KSC1173 KSA473	TIP31 TIP32	BD241 BD242	KSD288 KSA614	TIP31A TIP32A KSD880 KSB834 KSC1983 BD241A BD242A		TIP31B TIP32B BD241B BD242B	TIP31C TIP32C BD241C BD242C									KSC5020 KSC5060	KSC5027
4A					KSC2233		KSD526 KSB596						KSD5018 KSE 13004		KSE 13005			
5A					KSD73 TIP120 TIP125	KSD362	TIP121 TIP126	KSC2517 TIP122 TIP127 KSB601 KSD560							KSC2518 BUT11 KSC5039	BUT11A	KSC5021 KSC5061	
6		TIP41 TIP42	BDW23 BDW24 BD243 BD244		TIP41A TIP42A BDW23A BDW24A BD243A BD244A		TIP41B TIP42B BUW23B BUW24B BD243B BD244B	TIP41C TIP42C BD243C BD244C BDW23C BDW24C	KSD363						KSC2335			
7					KSD568 KSB707		KSD569 KSB708	KSC2334 KSA1010		BU407 BU407H	BU406 BU406H BU408							
8			BDX53 BDX54 BD533 BD534		TIP100 TIP105 BDX53A BDX54A BD535 BD536		TIP101 TIP106 BDX53B BDX54B BD537 BD538	TIP102 TIP107 BDX53C BDX54C		BU807	BU806		KSE 5740 KSE 13006	KSE 5741	KSE 5742 KSE 13007			
10			BDX33A BDX34A		KSE3055T KSE2955T TIP140T TIP145T BDX33A BDX34A		TIP141T TIP146T BDX33B BDX34B D44H D45H	TIP142T TIP147T BDX33C BDX34C										
12			BDW93 BDW94		BDW93A BDW94A		BDW93B BDW94B	BDW93C BDW94C					KSE 13008		KSE 13009			

TO-220(F) Type

I_C \ V_{CEO}	40V	55V	60V	70V	80V	100V	150V	400V
1.5A							KSA1304 KSC3296	
3A	KSB1023 KSD1413	KSA1614	KSB1015 KSD1406 KSB1366 KSD2012 KSD1273 KSD1944					
4A					KSB1017 KSD1408			
5A				KSD1362		KSB1098 KSD1589		
7A			KSB1022 KSD1417 KSB1097 KSD1588					KSC3158

TO-3P & TO-3P(F) Type

I_C \ V_{CEO}	2.5A	3A	3.5A	4A	4.5A	5A	6A	7A	8A	9A	10A	12A	15A
50													KSC5047
140												KSB817 KSD1047	
375							BU426						
400							BU426A				KSC2749		KSC2751
450													
500				KSC5022				KSC5023			KSC5024		KSC5025
600													
700						BU508AF							
800	*KSD5070 KSD5074	KSC5028	*KSD5071 KSD5075		KSC5029	*KSD5072 KSD5076	KSC5030		KSC5031				

*: Built in Damper Diode

1. SELECTION GUIDE

TO-220 N-CHANNEL

BVdss(V)	ID(on)(A)	RDS(on)(Ω)	Part Number	Remark	Package
50.00	5.90	0.30	IRFZ12		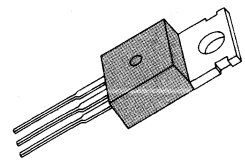
	8.00	0.30	IRLZ10		
	7.20	0.20	IRFZ10		
	14.00	0.12	IRFZ22		
	15.00	0.15	IRLZ20		
	15.00	0.10	IRFZ20		
	25.00	0.07	IRLZ30		
	25.00	0.07	IRFZ32		
	30.00	0.05	IRFZ30		
	35.00	0.04	IRLZ40		
	35.00	0.035	IRFZ42		
	35.00	0.028	IRFZ40		
60.00	8.00	0.30	IRLZ14		
	8.30	0.30	IRFZ15		
	10.00	0.20	IRFZ14		
	14.00	0.12	IRFZ25		
	15.00	0.10	IRFZ24		
	15.00	0.15	IRLZ24		
	25.00	0.07	IRLZ34		
	25.00	0.07	IRFZ35		
	30.00	0.05	IRFZ34		
	35.00	0.035	IRFZ45		
	35.00	0.028	IRFZ44		
	35.00	0.04	IRLZ44		
80.00	4.80	0.75	IRL511		
	4.90	0.74	IRF513		
	5.60	0.54	IRF511		
	7.90	0.40	IRL521		
	8.00	0.36	IRF523		
	9.20	0.27	IRF521		
	12.00	0.23	IRF533		
	13.00	0.20	IRL531		
	14.00	0.16	IRF531		
	24.00	0.11	IRL541		
	25.00	0.10	IRF543		
	28.00	0.077	IRF541		
100.00	4.80	0.75	IRL510		
	4.90	0.74	IRF512		
	5.60	0.54	IRF510		
	7.90	0.40	IRL520		
	8.00	0.36	IRF522		
	9.20	0.27	IRF520		
	12.00	0.23	IRF532		
	13.00	0.20	IRL530		
	14.00	0.16	IRF530		
	24.00	0.11	IRL540		
	25.00	0.10	IRF542		
	28.00	0.077	IRF540		

TO-220 N-CHANNEL (Continued)

BVdss(V)	ID(on)(A)	RDS(on)(Ω)	Part Number	Remark	Package
150.00	2.00	2.40	IRL611		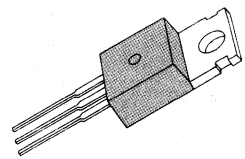
	2.60	2.40	IRF613		
	3.30	1.50	IRF611		
	4.00	1.20	IRL621		
	4.00	1.20	IRF623		
	5.00	0.80	IRF621		
	8.00	0.60	IRL631		
	8.00	0.60	IRF633		
	9.00	0.40	IRF631		
	16.00	0.22	IRL641		
	16.00	0.22	IRF643		
	18.00	0.18	IRF641		
200.00	2.00	2.40	IRL610		
	2.60	2.40	IRF612		
	3.30	1.50	IRF610		
	4.00	1.20	IRL620		
	4.00	1.20	IRF622		
	5.00	0.80	IRF620		
	8.00	0.60	IRL630		
	8.00	0.60	IRF632		
	9.00	0.40	IRF630		
	16.00	0.22	IRL640		
	16.00	0.22	IRF642		
	18.00	0.18	IRF640		
250.00	1.60	3.00	IRF615		
	2.00	2.00	IRF614		
	3.30	1.50	IRF625		
	3.80	1.10	IRF624		
	6.50	0.68	IRF635		
	8.10	0.45	IRF634		
	13.00	0.34	IRF645		
	14.00	0.28	IRF644		
350.00	1.70	5.00	IRF713		
	2.00	3.60	IRF711		
	2.50	2.50	IRF723		
	3.00	1.80	IRF721		
	5.00	1.50	IRF733		
	5.50	1.00	IRF731		
	8.00	0.80	IRF743		
	10.00	0.55	IRF741		
400.00	1.70	5.00	IRF712		
	2.00	3.60	IRF710		
	2.50	2.50	IRF722		
	3.00	1.80	IRF720		
	5.00	1.50	IRF732		
	5.50	1.00	IRF730		
	8.00	0.80	IRF742		
	10.00	0.55	IRF740		

TO-220 N-CHANNEL (Continued)

BVdss(V)	ID(on)(A)	RDS(on)(Ω)	Part Number	Remark	Package
450.00	2.20	4.00	IRF823		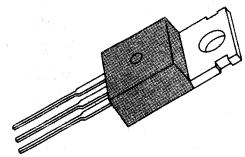
	2.50	3.00	IRF821		
	4.00	2.00	IRF833		
	4.50	1.50	IRF831		
	7.00	1.10	IRF843		
	8.00	0.85	IRF841		
500.00	2.20	4.00	IRF822		
	2.50	3.00	IRF820		
	4.00	2.00	IRF832		
500.00	4.50	1.50	IRF830		
	7.00	1.10	IRF842		
	8.00	0.85	IRF840		
550.00	4.00	3.00	SSP4N55		
	6.00	1.80	SSP6N55		
600.00	4.00	3.00	SSP4N60		
	6.00	1.80	SSP6N60		
700.00	3.00	6.00	SSP3N70		
	3.00	5.00	SSP3N70A		
	4.00	3.50	SSP4N70		
	4.00	2.50	SSP4N70A		

TO-220 P-CHANNEL

BVdss(V)	ID(on)(A)	RDS(on)(Ω)	Part Number	Remark	Package
– 50.00	– 4.00	0.70	IRF9Z12		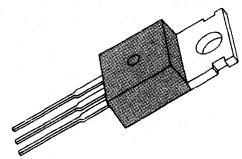
	– 4.70	0.50	IRF9Z10		
	– 8.90	0.33	IRF9Z22		
	– 9.80	0.28	IRF9Z20		
	– 15.00	0.21	IRF9Z32		
	– 18.00	0.14	IRF9Z30		
– 60.00	– 2.50	1.60	IRF9513		
	– 3.00	1.20	IRF9511		
	– 4.00	0.70	IRF9Z15		
	– 4.70	0.50	IRF9Z14		
	– 5.00	0.80	IRF9523		
	– 6.00	0.60	IRF9521		
	– 8.90	0.33	IRF9Z25		
	– 9.80	0.28	IRF9Z24		
	– 10.00	0.40	IRF9533		
	– 12.00	0.30	IRF9531		
	– 15.00	0.30	IRF9543		
	– 15.00	0.21	IRF9Z35		
	– 18.00	0.14	IRF9Z34		
	– 19.00	0.20	IRF9541		
– 100.00	– 2.50	1.60	IRF9512		
	– 3.00	1.20	IRF9510		
	– 5.00	0.80	IRF9522		
	– 6.00	0.60	IRF9520		
	– 10.00	0.40	IRF9532		
	– 12.00	0.30	IRF9530		
	– 15.00	0.30	IRF9542		
	– 19.00	0.20	IRF9540		
– 150.00	– 1.50	4.50	IRF9613		
	– 1.75	3.00	IRF9611		
	– 3.00	2.40	IRF9623		
	– 3.50	1.50	IRF9621		
	– 5.50	1.20	IRF9633		
	– 6.50	0.80	IRF9631		
	– 9.00	0.70	IRF9643		
	– 11.00	0.50	IRF9641		
– 200.00	– 1.50	4.50	IRF9612		
	– 1.75	3.00	IRF9610		
	– 3.00	2.40	IRF9622		
	– 3.50	1.50	IRF9620		
	– 5.50	1.20	IRF9632		
	– 6.50	0.80	IRF9630		
	– 9.00	0.70	IRF9642		
	– 11.00	0.50	IRF9640		

TO-3P N-CHANNEL

BVdss(V)	ID(on)(A)	RDS(on)(Ω)	Part Number	Remark	Package
60.00	60.00	0.03	SSH60N06		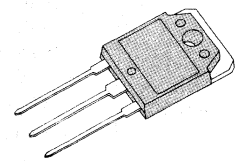
	60.00	0.025	SSH60N06A		
80.00	12.00	0.23	IRFP133		
	14.00	0.16	IRFP131		
	25.00	0.10	IRFP143		
	28.00	0.077	IRFP141		
	34.00	0.080	IRFP153		
	40.00	0.055	IRFP151		
100.00	12.00	0.23	IRFP132		
	14.00	0.16	IRFP130		
	25.00	0.10	IRFP142		
	28.00	0.077	IRFP140		
	34.00	0.080	IRFP152		
	40.00	0.055	IRFP150		
	60.00	0.03	SSH60N10		
	60.00	0.025	SSH60N10A		
150.00	4.00	1.20	IRFP233		
	8.00	0.60	IRFP233		
	9.00	0.40	IRFP231		
	16.00	0.22	IRFP243		
	18.00	0.18	IRFP241		
	25.00	0.12	IRFP253		
	30.00	0.085	IRFP251		
	40.00	0.065	SSH40N15A		
	40.00	0.080	SSH40N15		
200.00	8.00	0.60	IRFP232		
	9.00	0.40	IRFP230		
	16.00	0.22	IRFP242		
	18.00	0.18	IRFP240		
	25.00	0.12	IRFP252		
	30.00	0.085	IRFP250		
	40.00	0.065	SSH40N20A		
	40.00	0.080	SSH40N20		
250.00	13.00	0.34	IRFP245		
	14.00	0.28	IRFP244		
	21.00	0.17	IRFP255		
	23.00	0.14	IRFP254		
350.00	5.00	1.50	IRFP333		
	5.50	1.00	IRFP331		
	8.00	0.80	IRFP343		
	10.00	0.55	IRFP341		
	13.00	0.40	IRFP353		
	15.00	0.30	IRFP351		
	25.00	0.20	SSH25N35A		
	25.00	0.25	SSH25N35		

TO-3P N-CHANNEL (Continued)

BVdss(V)	ID(on)(A)	RDS(on)(Ω)	Part Number	Remark	Package
400.00	5.00	1.50	IRFP332		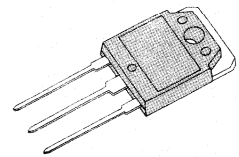
	5.50	1.00	IRFP330		
	8.00	0.80	IRFP342		
	10.00	0.55	IRFP340		
	13.00	0.40	IRFP352		
	15.00	0.30	IRFP350		
	25.00	0.20	SSH25N40A		
	25.00	0.25	SSH25N40		
450.00	4.00	2.00	IRFP433		
	4.50	1.50	IRFP431		
	7.00	1.10	IRFP443		
	8.00	0.85	IRFP441		
	12.00	0.50	IRFP453		
	13.00	0.40	IRFP451		
	20.00	0.25	SSH20N45A		
	20.00	0.30	SSH20N45		
500.00	4.00	2.00	IRFP432		
	4.50	1.50	IRFP430		
	7.00	1.10	IRFP442		
	8.00	0.85	IRFP440		
	12.00	0.50	IRFP452		
	13.00	0.40	IRFP450		
	20.00	0.25	SSH20N50A		
	20.00	0.30	SSH20N50		
550.00	4.00	3.00	SSH4N55		
	6.00	1.80	SSH6N55		
	8.00	1.00	SSH8N55		
	15.00	0.45	SSH15N55A		
	15.00	0.50	SSH15N55		
600.00	6.00	1.80	SSH6N60		
	8.00	1.00	SSH8N60		
	15.00	0.45	SSH15N60A		
	15.00	0.50	SSH15N60		
700.00	3.00	6.00	SSH3N70		
	3.00	5.00	SSH3N70A		
	4.00	3.50	SSH4N70		
	4.00	2.50	SSH4N70A		
	6.00	1.90	SSH6N70		
	6.00	1.40	SSH6N70A		
	10.00	1.20	SSH10N70		
	10.00	0.90	SSH10N70A		

TO-3P P-CHANNEL

BVdss(V)	ID(on)(A)	RDS(on)(Ω)	Part Number	Remark	Package
– 60.00	– 10.00	0.40	IRFP9133		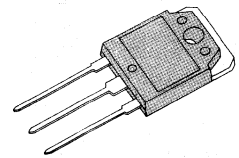
	– 12.00	0.30	IRFP9131		
	– 15.00	0.30	IRFP9143		
	– 19.00	0.20	IRFP9141		
– 100.00	– 10.00	0.40	IRFP9132		
	– 12.00	0.30	IRFP9130		
	– 15.00	0.30	IRFP9142		
	– 19.00	0.20	IRFP9140		
– 150.00	– 5.50	1.20	IRFP9233		
	– 6.50	0.80	IRFP9231		
	– 9.00	0.70	IRFP9243		
	– 11.00	0.50	IRFP9241		
– 200.00	– 5.50	1.20	IRFP9232		
	– 6.50	0.80	IRFP9230		
	– 9.00	0.70	IRFP9242		
	– 11.00	0.50	IRFP9240		

I-PAK N-CHANNEL

BVdss(V)	ID(on)(A)	RDS(on)(Ω)	Part Number	Remark	Package
50.00	6.70	0.300	IRFU012		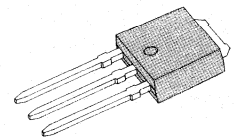
	8.20	0.300	IRLU010		
	8.20	0.200	IRFU010		
	14.00	0.120	IRFU022		
	15.00	0.120	IRLU020		
	15.00	0.100	IRFU020		
60.00	6.70	0.300	IRFU015		
	8.20	0.200	IRFU014		
	8.20	0.300	IRLU014		
	14.00	0.120	IRFU025		
	15.00	0.120	IRLU024		
	15.00	0.100	IRLU024		
80.00	4.70	0.540	IRFU111		
	8.40	0.270	IRFU121		
100.00	4.70	0.540	IRFU110		
	8.40	0.270	IRFU120		
200.00	2.10	2.400	IRFU212		
	2.70	1.500	IRFU210		
	3.80	1.200	IRFU222		
	4.60	0.800	IRFU220		
400.00	2.00	3.600	IRFU310		
	3.00	1.800	IRFU320		
450.00	0.50	10.000	IRFU411		
500.00	1.20	8.500	SSU1N50		
	2.50	3.000	IRFU420		

I-PAK P-CHANNEL

BVdss(V)	ID(on)(A)	RDS(on)(Ω)	Part Number	Remark	Package
– 50.00	– 4.50	0.700	IRFU9012		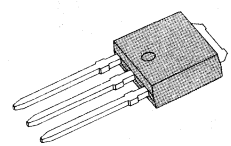
	– 5.30	0.500	IRFU9010		
	– 9.00	0.330	IRFU9022		
	– 9.90	0.280	IRFU9020		
– 60.00	– 4.50	0.700	IRFU9015		
	– 5.30	0.500	IRFU9014		
	– 9.00	0.330	IRFU9015		
	– 9.90	0.280	IRFU9024		
– 80.00	– 3.20	1.200	IRFU9111		
	– 5.90	0.600	IRFU9121		
– 100.00	– 3.20	1.200	IRFU9110		
	– 5.90	0.600	IRFU9120		
– 200.00	– 1.60	4.500	IRFU9212		
	– 2.00	3.000	IRFU9210		
	– 2.80	2.400	IRFU9222		
	– 3.60	1.500	IRFU9220		

D-PAK N-CHANNEL

BVdss(V)	ID(on)(A)	RDS(on)(Ω)	Part Number	Remark	Package
50.00	6.70	0.300	IRFR012		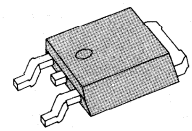
	8.20	0.300	IRLR010		
	8.20	0.200	IRFR010		
	14.00	0.120	IRFR022		
	15.00	0.120	IRLR020		
	15.00	0.100	IRFR020		
60.00	6.70	0.300	IRFR015		
	8.20	0.200	IRFR014		
	8.20	0.300	IRLR014		
	14.00	0.120	IRFR025		
	15.00	0.120	IRLR024		
	15.00	0.100	IRFR024		
80.00	4.70	0.540	IRFR111		
	8.40	0.270	IRFR121		
100.00	4.70	0.540	IRFR110		
	8.40	0.270	IRFR120		
200.00	2.10	2.400	IRFR212		
	2.70	1.500	IRFR210		
	3.80	1.200	IRFR222		
	4.60	0.800	IRFR220		
400.00	2.00	3.600	IRFR310		
	3.00	1.800	IRFR320		
450.00	0.50	10.000	IRFR411		
500.00	1.20	8.500	SSR1N50		
	2.50	3.000	IRFR420		

D-PAK P-CHANNEL

BVdss(V)	ID(on)(A)	RDS(on)(Ω)	Part Number	Remark	Package
– 50.00	– 4.50	0.700	IRFR9012		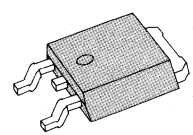
	– 5.30	0.500	IRFR9010		
	– 9.00	0.330	IRFR9022		
	– 9.90	0.280	IRFR9020		
– 80.00	– 3.20	1.200	IRFR9111		
	– 5.90	0.600	IRFR9121		
– 100.00	– 3.20	1.200	IRFR9110		
	– 5.90	0.600	IRFR9120		
– 200.00	– 1.60	4.500	IRFR9212		
	– 2.00	3.000	IRFR9210		
	– 2.80	2.400	IRFR9222		
	– 3.60	1.500	IRFR9220		

TO-220 FULL PACKAGE N-CHANNEL

BVdss(V)	ID(on)(A)	RDS(on)(Ω)	Part Number	Remark	Package
50.00	14.00	0.120	IRFSZ22		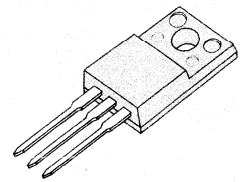
	15.00	0.100	IRFSZ20		
	25.00	0.070	IRFSZ32		
	30.00	0.050	IRFSZ30		
	35.00	0.035	IRFSZ42		
	35.00	0.028	IRFSZ40		
60.00	14.00	0.120	IRFSZ25		
	15.00	0.100	IRFSZ24		
	25.00	0.070	IRFSZ35		
	30.00	0.050	IRFSZ34		
	35.00	0.035	IRFSZ45		
	35.00	0.028	IRFSZ44		
80.00	8.00	0.360	IRFS523		
	9.20	0.270	IRFS521		
	12.00	0.230	IRFS533		
	14.00	0.160	IRFS531		
	25.00	0.100	IRFS543		
	28.00	0.077	IRFS541		
100.00	8.00	0.360	IRFS522		
	9.20	0.270	IRFS520		
	12.00	0.230	IRFS532		
	14.00	0.160	IRFS530		
	25.00	0.100	IRFS542		
	28.00	0.077	IRFS540		
200.00	4.00	1.200	IRFS622		
	5.00	0.800	IRFS620		
	8.00	0.600	IRFS632		
	9.00	0.400	IRFS630		
	16.00	0.220	IRFS642		
	18.00	0.180	IRFS640		
250.00	3.30	1.500	IRFS625		
	3.80	1.100	IRFS624		
	6.50	0.680	IRFS635		
	8.10	0.450	IRFS634		
	13.00	0.340	IRFS645		
	14.00	0.280	IRFS644		
350.00	2.50	2.500	IRFS723		
	3.00	1.800	IRFS721		
	5.00	1.500	IRFS733		
	5.50	1.000	IRFS731		
	8.00	0.800	IRFS743		
	10.00	0.550	IRFS741		
400.00	2.50	2.500	IRFS722		
	3.00	1.800	IRFS720		
	5.00	1.500	IRFS732		
	5.50	1.000	IRFS730		
	8.00	0.800	IRFS742		
	10.00	0.550	IRFS740		

1

TO-220 FULL PACKAGE N-CHANNEL (Continued)

BVdss(V)	ID(on)(A)	RDS(on)(Ω)	Part Number	Remark	Package
450.00	2.20	4.000	IRFS823		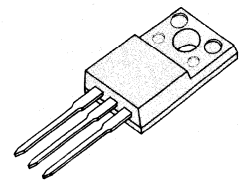
	2.50	3.000	IRFS821		
	4.00	2.000	IRFS833		
	4.50	1.500	IRFS831		
	7.00	1.100	IRFS843		
	8.00	0.850	IRFS841		
500.00	2.20	4.000	IRFS822		
	2.50	3.000	IRFS820		
	4.00	2.000	IRFS832		
	4.50	1.500	IRFS830		
	7.00	1.100	IRFS842		
	8.00	0.850	IRFS840		
550.00	4.00	3.000	SSS4N55		
	6.00	1.800	SSS6N55		
600.00	4.00	3.000	SSS4N60		
	6.00	1.800	SSS6N60		

TO-220 FULL PACKAGE P-CHANNEL

BVdss(V)	ID(on)(A)	RDS(on)(Ω)	Part Number	Remark	Package
– 60.00	– 5.00	0.80	IRFS9523		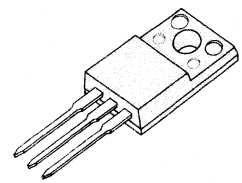
	– 6.00	0.60	IRFS9521		
	– 10.00	0.40	IRFS9533		
	– 12.00	0.30	IRFS9531		
	– 15.00	0.30	IRFS9543		
	– 19.00	0.20	IRFS9541		
– 100.00	– 5.00	0.80	IRFS9522		
	– 6.00	0.60	IRFS9520		
	– 10.00	0.40	IRFS9532		
	– 12.00	0.30	IRFS9530		
	– 15.00	0.30	IRFS9542		
	– 19.00	0.20	IRFS9540		
– 150.00	– 3.00	2.40	IRFS9623		
	– 3.50	1.50	IRFS9621		
	– 5.50	1.20	IRFS9633		
	– 6.50	0.80	IRFS9631		
	– 9.00	0.70	IRFS9643		
	– 11.00	0.50	IRFS9641		
– 200.00	– 3.00	2.40	IRFS9622		
	– 3.50	1.50	IRFS9620		
	– 5.50	1.20	IRFS9632		
	– 6.50	0.80	IRFS9630		
	– 9.00	0.70	IRFS9642		
	– 11.00	0.50	IRFS9640		

TO-3P FULL PACKAGE N-CHANNEL

BVdss(V)	ID(on)(A)	RDS(on)(Ω)	Part Number	Remark	Package
80.00	8.30	0.230	IRFS133		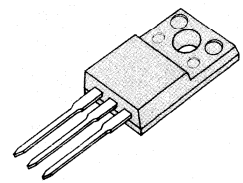
	9.70	0.160	IRFS131		
	17.30	0.100	IRFS143		
	19.40	0.077	IRFS141		
	23.50	0.080	IRFS153		
	27.50	0.055	IRFS151		
100.00	8.30	0.230	IRFS132		
	9.70	0.160	IRFS130		
	17.30	0.100	IRFS142		
	19.40	0.077	IRFS140		
	23.50	0.080	IRFS152		
	27.70	0.055	IRFS150		
150.00	5.50	0.600	IRFS233		
	6.20	0.400	IRFS231		
	11.00	0.220	IRFS243		
	12.50	0.180	IRFS241		
	17.30	0.120	IRFS253		
	20.70	0.085	IRFS251		
200.00	5.50	0.600	IRFS232		
	6.20	0.400	IRFS230		
	11.00	0.220	IRFS242		
	12.50	0.180	IRFS240		
	17.30	0.120	IRFS252		
	20.70	0.085	IRFS250		
350.00	3.50	1.500	IRFS333		
	3.80	1.000	IRFS331		
	5.50	0.800	IRFS343		
	6.90	0.550	IRFS341		
	9.00	0.400	IRFS353		
	10.40	0.300	IRFS351		
400.00	3.50	1.500	IRFS332		
	3.80	1.000	IRFS330		
	5.50	0.800	IRFS342		
	6.90	0.550	IRFS340		
	9.00	0.400	IRFS352		
	10.40	0.300	IRFS350		
450.00	2.80	2.000	IRFS433		
	3.10	1.500	IRFS431		
	4.80	1.100	IRFS443		
	5.50	0.850	IRFS441		
	8.30	0.500	IRFS453		
	9.00	0.400	IRFS451		
500.00	2.80	2.000	IRFS432		
	3.10	1.500	IRFS430		
	4.80	1.100	IRFS442		
	5.50	0.850	IRFS440		
	8.30	0.500	IRFS452		
	9.00	0.400	IRFS450		

TO-3P FULL PACKAGE P-CHANNEL

BVdss(V)	ID(on)(A)	RDS(on)(Ω)	Part Number	Remark	Package
– 60.00	– 6.90	0.40	IRFS9133		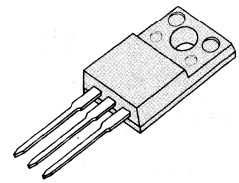
	– 8.30	0.30	IRFS9131		
	– 10.40	0.30	IRFS9143		
	– 13.20	0.20	IRFS9141		
– 100.00	– 6.90	0.40	IRFS9132		
	– 8.30	0.30	IRFS9130		
	– 10.40	0.30	IRFS9142		
	– 13.20	0.20	IRFS9140		
– 150.00	– 3.80	1.20	IRFS9233		
	– 4.50	0.80	IRFS9231		
	– 6.20	0.70	IRFS9243		
	– 7.60	0.50	IRFS9241		
– 200.00	– 3.80	1.20	IRFS9232		
	– 4.50	0.80	IRFS9230		
	– 6.20	0.70	IRFS9242		
	– 7.60	0.50	IRFS9240		

LOGIC LEVEL SFET

TO-220 N-CHANNEL

BVdss(V)	ID(on)(A)	RDS(on)(Ω)	Part Number	Remark	Package
50.00	8.00	0.30	IRLZ10		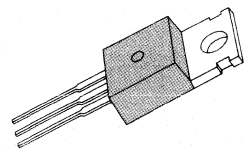
	15.00	0.15	IRLZ20		
	25.00	0.07	IRLZ30		
	35.00	0.04	IRLZ40		
60.00	8.00	0.30	IRLZ14		
	15.00	0.15	IRLZ24		
	25.00	0.07	IRLZ34		
	35.00	0.04	IRLZ44		
80.00	4.80	0.75	IRL511		
	7.90	0.40	IRL521		
	13.00	0.22	IRL531		
	24.00	0.11	IRL541		
100.00	4.80	0.75	IRL510		
	7.90	0.40	IRL520		
	13.00	0.22	IRL530		
	24.00	0.11	IRL540		
150.00	2.00	2.40	IRL611		
	4.00	1.20	IRL621		
	8.00	0.60	IRL631		
	16.00	0.22	IRL641		
200.00	2.00	2.40	IRL610		
	4.00	1.20	IRL620		
	8.00	0.60	IRL630		
	16.00	0.22	IRL640		

N-CHANNEL MOSFET TO-220

I_D \ V_{DS}	50	60	80	100	120	150	180	200	250	350	400	450	500	550	600	700	800	850	900
1.3									IRF 713	IRF 712									
1.5								IRF 711	IRF 710	IRF									
2					IRF 613		IRF 612	IRF 614			IRF 823	IRF 822						*SSP 2N85	*SSP 2N90
2.5					IRF 611		IRF 610		IRF 723	IRF 722	IRF 821	IRF 820							
3									IRF 625	IRF 721	IRF 720					SSP 3N70	SSP 3N80		
3.5									IRF 624										
4						IRF 623		IRF 622				IRF 833	IRF 832	SSP 4N55	SSP 4N60	SSP 4N70	SSP 4N80	*SSP 4N85	*SSP 4N90
4.5												IRF 831	IRF 830						
5						IRF 621		IRF 620		IRF 733	IRF 732								
5.5										IRF 731	IRF 730								
6	IRF Z12								IRF 635					SSP 6N55	SSP 6N60	SSP 6N70	SSP 6N80		
7	IRF Z10				SSP 7N12	SSP 7N15	SSP 7N18	SSP 7N20				IRF 843	IRF 842						
8			IRF 523	IRF 522		IRF 633		IRF 632	IRF 634	IRF 743	IRF 742	IRF 841	IRF 840						
9			IRF 521	IRF 520		IRF 631		IRF 630											
10	SSP 10N05	SSP 10N06	SSP 10N08	SSP 10N10						IRF 741	IRF 740								
12		SSP 12N05	IRF 533	IRF 532					IRF 645										
14	IRF Z22		IRF 531	IRF 530					IRF 644										
16	IRF Z20	IRF Z24				IRF 643		IRF 642											
18						IRF 641		IRF 640											
24	IRF Z30	IRF 543	IRF 543	IRF 542															
27-30	IRF Z30	IRF Z34	IRF 541	IRF 540															
35	IRF Z40	IRF Z44																	

* Under Development

N-CHANNEL MOSFET TO-3P

I_D \ V_{DS}	50	60	80	100	120	150	180	200	250	350	400	450	500	550	600	700	800	850	900
2												IRFP 423	IRFP 422					*SSH 2N85	*SSH 2N90
2.5										IRFP 323	IRFP 322	IRFP 421	IRFP 420						
3										IRFP 321	IRFP 320					SSH 3N70	SSH 3N80		
4						IRFP 223		IRFP 222				IRFP 433	IRFP 432	SSH 4N55	SSH 4N60	SSH 4N70	SSH 4N80	*SSH 4N85	*SSH 4N90
4.5												IRFP 431	IRFP 430						
5						IRFP 221		IRFP 220		IRFP 333	IRFP 332							*SSH 5N85	*SSH 5N90
5.5										IRFP 331	IRFP 330								
6														SSH 6N55	SSH 6N60	SSH 6N70	SSH 6N80		
7					SSH 7N12	SSH 7N15	SSH 7N18	SSH 7N20				IRFP 443	IRFP 442						
8				IRFP 122		IRFP 233		IRFP 232		IRFP 343	IRFP 342	IRFP 441	IRFP 440	SSH 8N55	SSH 8N60			*SSH 8N85	*SSH 8N90
9				IRFP 120		IRFP 231		IRFP 230											
10	SSH 10N05	SSH 10N06	SSH 10N08	SSH 10N10						IRFP 341	IRFP 340					*SSH 10N70	*SSH 10N80		
12			IRFP 133	IRFP 132					IRFP 245			IRFP 453	IRFP 452						
13										IRFP 353	IRFP 352	IRFP 451	IRFP 450						
14			IRFP 131	IRFP 130					IRFP 244										
15										IRFP 351	IRFP 350			SSH 15N55	SSH 15N60				
16						IRFP 243		IRFP 242											
18						IRFP 241		IRFP 240											
20									IRFP 255			SSH 20N45	SSH 20N50						
24			IRFP 143	IRFP 142					IRFP 244										
25						IRFP 253		IRFP 252		SSH 25N35	SSH 25N40								
27			IRFP 141	IRFP 140															
30						IRFP 251		IRFP 250											
33			IRFP 153	IRFP 152															
40			IRFP 151	IRFP 150		SSH 40N15		SSH 40N20											
60		SSH 60N06		SSH 60N10															

* Under Development

N-CHANNEL MOSFET TO-3P F/P

I_D \ V_{DD}	80	100	150	200	350	400	450	500
4							IRFS 433	IRFS 432
4.5							IRFS 431	IRFS 430
5					IRFS 333	IRFS 332		
5.5					IRFS 331	IRFS 330		
7							IRFS 443	IRFS 442
8			IRFS 233	IRFS 232	IRFS 343	IRFS 342	IRFS 441	IRFS 440
9			IRFS 231	IRFS 230				
10					IRFS 341	IRFS 340		
12	IRFS 133	IRFS 132					IRFS 453	IRFS 452
13					IRFS 353	IRFS 352	IRFS 451	IRFS 450
14	IRFS 131	IRFS 130						
15					IRFS 351	IRFS 350		
16			IRFS 243	IRFS 242				
18			IRFS 241	IRFS 240				
24	IRFS 143	IRFS 142						
25			IRFS 253	IRFS 252				
27	IRFS 141	IRFS 140						
30			IRFS 251	IRFS 250				
33	IRFS 153	IRFS 152						
40	IRFS 151	IRFS 150						

P-CHANNEL TO-3P F/P

I_D \ V_{DD}	– 60	– 100	– 150	– 200
– 5.5			IRFS 9233	IRFS 9232
– 6.5			IRFS 9231	IRFS 9230
– 9			IRFS 9243	IRFS 9242
– 10	IRFS 9133	IRFS 9132		
– 11			IRFS 9241	IRFS 9240
– 12	IRFS 9131	IRFS 9230		
– 15	IRFS 9143	IRFS 9242		
– 19	IRFS 9141	IRFS 9140		

P-CHANNEL TO-220

I_D \ V_{DS}	– 60	– 100	– 150	– 200
– 1.5			IRF8613	IRF9612
– 1.75			IRF9611	IRF9610
– 2.5	IRF9513	IRF9512		
– 3	IRF9511	IRF9510	IRF9623	IRF9622
– 3.5			IRF9621	IRF9620
– 5	IRF9523	IRF9522		
– 5.5			IRF9633	IRF9632
– 6	IRF9521	IRF9520		
– 6.5			IRF9631	IRF9630
– 9			IRF9643	IRF9642
– 10	IRF9533	IRF9532		
– 11			IRF9641	IRF9640
– 12	IRF9531	IRF9530		
– 15	IRF9543	IRF9542		
– 19	IRF9541	IRF9540		

N-CHANNEL D-PAK

I_D \ V_{DS}	50	80	100	200	400	450	500
0.5						IRFR411	
1.0							SSR1N50
2.1				IRFR212	IRFR310 (2A)		
2.7				IRFR210	IRFR320 (3A)		IRFR420 (2.5A)
3.8				IRFR222			
4.7		IRFR111	IRFR110				
6.7	IRFR012						
8.2	IRFR010						
8.4		IRFR121	IRFR120				
14	IRFR022						
15	IRFR020						

P-CHANNEL TO-3P

I_D \ V_{DS}	– 60	– 100	– 150	– 200
– 5.5			IRFP9233	IRFP9232
– 6.5			IRFP9231	IRFP9230
– 9			IRFP9243	IRFP9242
– 10	IRFP9133	IRFP9132		
– 11			IRFP9241	IRFP9240
– 12	IRFP9131	IRFP9130		
– 15	IRFP9143	IRFP9142		
– 19	IRFP9141	IRFP9140		

P-CHANNEL D-PAK

I_D \ V_{DS}	– 50	– 80	– 100	– 200
– 1.6				IRFR9212
– 2.0				IRFR9210
– 2.8				IRFR9222
– 3.2		IRFR9111	IRFR9110	
– 3.6				IRFR9220
– 4.5	IRFR9012			
– 5.3	IRFR9010			
– 5.9		IRFR9121	IRFR9120	
– 9	IRFR9022			
– 9.9	IRFR9020			

P-CHANNEL I-PAK

I_D \ V_{DS}	– 50	– 80	– 100	– 200
– 1.6				IRFU9212
– 2.0				IRFU9210
– 2.8				IRFU9222
– 3.2		IRFU9111	IRFU9110	
– 3.6				IRFU9220
– 4.5	IRFU9012			
– 5.3	IRFU9010			
– 5.9		IRFU9121	IRFU9120	
– 9	IRFU9022			
– 9.9	IRFU9020			

N-CHANNEL I-PAK

I_D \ V_{DS}	50	80	100	200	400	450	500
0.5						IRFU411	
1.0							SSU1N50
2.1				IRFU212	IRFU310 (2A)		
2.7				IRFU210	IRFU320 (3A)		IRFU420 (2.5A)
3.8				IRFU222			
4.7		IRFU111	IRFU110				
6.7	IRFU012						
8.2	IRFU010						
8.4		IRFU121	IRFU120				
14	IRFU022						
15	IRFU020						

1. AUDIO APPLICATION

A. FM Front End

Type	Package	Function			Use			Remark
		RF	OSC	MIXER	R/C	Car	Hi-Fi	
KA22495/D	9 SIP/8 SOP	*	*	*	*		*	V_{CC} = 1.6 ~ 6V

B. FM/AM RF, IF and Detector System, AM Tuner System

Type	Package	Function						Use			Remark
		AM RF CONV	AM IF AMP	AM DET	FM IF AMP	FM DET	S/M	R/C	Car	Hi-Fi	
KA2243	16 DIP		*	*	*	*	*	*		*	V_{CC} = 3 ~ 14V
KA2244	9 SIP				*	*	*		*		V_{CC} = 8 ~ 16V
KA22441	16 ZSIP				*	*	*		*		V_{CC} = 6 ~ 14V
KA2245	7 SIP				*	*			*		V_{CC} = 8 ~ 15V
KA2247	16 DIP	*	*	*	*	*	*	*			V_{CC} = 3 ~ 8V
KA22471	16 DIP	*	*	*	*	*	*	*			V_{CC} = 3 ~ 8V
KA2248A/D	16 DIP/16 SOP	*	*	*	*	*	*	*			V_{CC} = 1.8 ~ 6V

C. FM Stereo Multiplex Decoder

Type	Package	PLL	Lamp Driver	VCO Stop	Sep. Cont.	Use			Remark
						R/C	Car	Hi-Fi	
KA2261	16 DIP	*	*	*	*	*	*		Sep = 45dB
KA2263	9 SIP	*	*	*		*	*		Sep = 45dB
KA2264/D	9 SIP/16 SOP	*	*	*		*			V_{CC} = 1.8 ~ 5V
KA2265	16 DIP	*	*	*	*			*	VCO Non-Adjusting MPX

† New Product
†† Under Development

D. Audio Power Amplifier

Type	Package	V_{CC} (V)	Output Power		Use			Remark
			$R_L = 4$ ohm	$R_L = 8$ ohm	R/C	Car	Hi-Fi	
KA2201	8 DIP	6		0.5W	*			$V_{CC} = 3 \sim 14V$
		9		1.2W				
KA2206	12 DIP/F	9	2.3W × 2		*			$V_{CC} = 4.5 \sim 11V$
KA2214	14 DIP H/S	9		1.2W × 2	*			$V_{CC} = 3 \sim 16V$
KA2209	8 DIP	3	110mW × 2		*			$V_{CC} = 1.8 \sim 9V$
KA22103	17 ZSIP H/S	13.2	19W × 2			*		$V_{CC} = 9 \sim 18V$
KA2212	9 SIP	6		0.5W	*			$V_{CC} = 3.5 \sim 12V$
LM386/S	8 DIP/9 SIP	6		0.325W	*			$V_{CC} = 4 \sim 12V$
KA2213	14 DIP H/S	6	1W		*			Included Pre-Amp with ALC
KA22130	16 DIP	6	1W		*			
KA22131	24 SOP	3	69mW × 2(R_L = 16Ω)		*			$V_{CC} = 1.8 \sim 3.6V$ Included Auto Reverse Pre-AMP
KA22134	16 DIP	3	27mW × 2(R_L = 32Ω)		*			$V_{CC} = 1.8 \sim 6V$ Dual PRE + POWER AMP with Volume Control
KA22135	22 SDIP	3	28mW × 2(R_L = 32Ω)		*			$V_{CC} = 2 \sim 7.5V$ Dual PRE-POWER AMP and DC Motor Speed Controller
KA22136	28 SOP	3	28mW × 2 (R_L = 32Ω)		*			$V_{CC} = 2 \sim 5V$ Dual PRE-POWER AMP with Volume Control and DC Motor Speed Controller
KA8602	8 DIP/8 SOP	6	300mW (R_L = 32Ω)		*			$V_{CC} = 2 \sim 16V$ $R_L = 8Ω \sim 100Ω$

† New Product

E. Pre-Amplifier

Type	Package	Function	Use			Remark
			R/C	Car	Hi-Fi	
KA1222	8 SIP	Dual Pre-amplifier	*			V_{CC} = 2.5 ~ 6V
KA2220	9 SIP	Pre-amplifier with ALC	*		*	V_{CC} = 3.5 ~ 14V
KA2221	8 SIP	Dual Pre-amplifier	*	*	*	Included Voltage Regulator
KA22211	8 SIP	Dual Pre-amplifier	*	*	*	V_{CC} = 5 ~ 14V
KA2223	16 DIP	5 Band Mono Graphic EQ AMP	*	*	*	V_{CC} = 5 ~ 13V
KA22233	22 DIP	3 Band Dual Graphic EQ AMP	*	*	*	V_{CC} = 5 ~ 15V
KA22234	24 ZSIP-S	5 Band Dual Graphic EQ AMP	*	*	*	V_{CC} = 3.5 ~ 14V
KA2224	14 DIP	Dual Pre-amplifier with ALC	*		*	V_{CC} = 4 ~ 13V
KA22241	9 SIP	Dual Pre-amplifier with ALC	*			V_{CC} = 4.5 ~ 14V
KA22242	10 SIP	Dual Pre-amplifier with ALC	*			V_{CC} = 4 ~ 12V
KA2225/D	16 DIP/16 SOP	Dual Pre-amplifier with Mute	*			V_{CC} = 1.6 ~ 5V
KA22261	16 DIP	Dual Pre-amplifier with ALC	*		*	Included REC AMP
KA2228	21 ZSIP-S	Dual Pre-amplifier system	*		*	V_{CC} = 3.5 ~ 7V
KA22291	24 SDIP	Quad Pre-amplifier system	*		*	V_{CC} = 5 ~ 14V
KA7226	14 DIP	Dual Pre-amplifier with ALC	*		*	V_{CC} = 3 ~ 16V
††KA22292	48 QFP	1 Chip Tape Recorder System	*		*	V_{CC} = 4.5 ~ 15V
††KA22293	48 QFP	Audio Signal Processor			*	V_{CC} = 12V

F. LED Level Meter Driver

Type	Package	Function	Remark
KA2281	16 DIP	5 Dot dual red/yellow/green LED driver	VU scale, input amplifier Reference voltage included
KA2284	9 SIP	5 Dot mono green LED driver	VU scale Reference voltage included
KA2285	9 SIP	5 Dot mono red LED driver	VU scale Reference voltage included
KA2287	9 SIP	5 Dot mono green LED driver	Linear scale Reference voltage included
KA2288	16 DIP	7 Dot mono LED driver	VU scale Reference voltage included

† New Product
†† Under Development

G. Electronic DC Volume Control

Type	Package	Function	Remark
†KA2250	16 DIP	Electronic DC Volume Control	V_{CC} = 6 ~ 12V

H. 1 Chip Radio, 1 Chip Tuner System

Type	Package	Function	Remark
KA22421/D	16 DIP/16 SOP	AM 1 Chip Radio	V_{CC} = 2 ~ 5V
†KA22426	28 SOP	AM/FM 1 Chip Radio	V_{CC} = 1.6 ~ 6V
KA22427	16 DIP	AM/FM 1 Chip Radio	V_{CC} = 3 ~ 12V
KA22429	16 SOP	FM 1 Chip Radio	V_{CC} = 1.8 ~ 6V
KA2292/D	24 DIP-S/24 SOP	AM/FM TUNER + MPX	V_{CC} = 1.8 ~ 7V
KA2293/D	24 DIP-S/24 SOP	AM/FM TUNER + MPX	V_{CC} = 1.8 ~ 7V
††KA2295	48 QFP	AM/FM TUNER + MPX for DTS	V_{CC} = 6 ~ 12V
††KA2296	64 QFP	AM/FM TUNER + N.C + MPX for CAR	V_{CC} = 7.5 ~ 9V
††KA2297	16 DIP	AM/FM TUNER	V_{CC} = 1.8 ~ 7V

I. Noise Reduction

Type	Package	Function	Remark
KA2271/D	16 DIP/16 SOP	Dolby B Type	V_{CC} = 8 ~ 16V
KA22711/D	16 DIP/16 SOP	Dolby B Type	V_{CC} = 5 ~ 16V
KA22712/D	16 DIP/16 SOP	Dolby B Type	V_{CC} = 6.5 ~ 16V
KA2272/D	16 ZSIP/16 SOP	FM Noise Canceller	V_{CC} = 8 ~ 15V

† New Product
†† Under Development

J. CD Player

Type	Package	Function	Remark
KS5990	80 QFP	16K SRAM + Digital Signal Processor	$V_{DD} = 5V$
KS5991	80 QFP		$V_{DD} = 3 \sim 4V$
KA8309B	48 QFP	Servo Signal Processor	$V_{CC} = 5V$
KA9201/Q	30 SDIP/SOP/ 32 QFP	RF Amp for CDP	$V_{CC} = 5V$
†KS9210	80 QFP	16K SRAM + DSP + Digital Out	$V_{DD} = 5V$
†KS9211	80 QFP	16K SRAM + Digital Signal Processor	$V_{DD} = 3.4 \sim 5.5V$
††KA9220	80 QFP	RF Amp + Servo Signal Processor	$V_{CC} = 5V$
†KA9221	48 QFP	Servo Signal Processor	$V_{CC} = 3.4V$
††KS9240	80 QFP	DSP for CD-ROM	$V_{DD} = 5V$
KA9256	10 SIP H/S	Dual OP Amp for CDP Motor Driver	$V_{CC} = 15V$, $V_{EE} = -15V$
KA9257	12 SIP H/S	2 CH BTL Motor Driver	$V_{CC} = 5V$
††KA9258	20 SOP/F	4 CH BTL Motor Driver	$V_{CC} = 5V$
†KA9270/D	20 DIP/SOP	Audio Filter for CDP	$V_{CC} = 5 \sim 12V$
††KS9282	80 QFP	16K SRAM + DSP + D/A Converter	$V_{DD} = 5V$
††KS9283	80 QFP	16K SRAM + Digital Signal Processor	$V_{DD} = 5V$
KDA0316	20 DIP/SOP	16-Bit D/A Converter	$V_{DD} = 5V$

K. LDP

Type	Package	Function	Remark
†KA9410	42 SDIP	Video Signal Processor	$V_{CC} = 5V$
†KA9420	42 SDIP	Servo Signal Processor	$V_{CC} = \pm 5V$
†KA9430	42 SDIP	Time Base Corrector Servo	$V_{CC} = 5V$
SL220B	28 DIP	OSD and Data Processor	$V_{CC} = 5V$
†KA9402P	10 SOP	Pre Amp for Photo Detector	$V_{CC} = \pm 5V$
††KA9401	80 QFP	Audio Signal Processor	$V_{CC} = 5V$
†KA9490	9 SIP	CCD Clock Driver	$V_{CC} = \pm 5V$

† New Product †† Under Development

L. DC Motor Speed Control

Type	Package	Function	Remark
KA2401	8 DIP	DC Motor Speed Controller	$V_{CC} = 4 \sim 12V$
KA2402	8 DIP/8 SOP	DC Motor Speed Controller	$V_{CC} = 1.8 \sim 8V$
KA2404/A	TO-92L/TO-126	DC Motor Speed Controller	$V_{CC} = 4 \sim 12V$
KA2407	TO-126	DC Motor Speed Controller	$V_{CC} = 3.5 \sim 14.4V$

M. μ-COM

Type	Package	Function	Remark
†KS55C232	64 QFP	Digital Tuning System (DTS) for Car Stereo	$V_{CC} = 5V$, $V_{EE} = -5V$
KS56C820	80 QFP	System Control for CDP	$V_{CC} = 5V$, $V_{EE} = -5V$

† New Product
†† Under Development

2. VIDEO APPLICATION

A. TV Only

Application	Type	Package	Circuit Function
SIF System	KA2101	14 DIP	IF amp, IF limiter, IF detector
SIF Subsystem for MPX	KA2105	9 SIP	IF amp, IF limiter, IF detector
Sound System	KA2102A	14 DIP H/S	KA2101 + 2.4W audio power amp
Sound Muting	KA2103L	9 SIP	Hori. sync detector, Integrator, Comparater, Voltage controller
Auto Power Off + Sound Muting	KA2104	9 SIP	KA2103 + auto power off control
VIF System	KA2911	16 DIP	VIF amp, Limiter, Video detector, Video amp, Noise invert, AGC detector, IF AGC, AFT, Reverse RF AGC
	KA2916	16 DIP	Forward RF AGC version of KA2911
	KA2912	14 DIP H/S	VIF amp, Limiter, Video detector, Video amp, IF AGC, Forward RF AGC, Noise canceller
VIF + SIF + Deflection	KA2915	28 DIP	VIF amp, Limiter, Video detector, Video AFT, IF AGC, Forward RF AGC, SIF amp, SIF limiter, SIF detector, Sync separator, Hori OSC/driver/AFC, OSC/pre-driver
NTSC Chroma + Deflection + Video System	KA2153	42 DIP	ACC amp./detector, Killer detector, Phase detector, CW OSC, Demodulator, Sawtooth gen, APC, X-ray protection, Hori OSC/drive, Vert OSC/amp, Reverse amp
NTSC 1 Chip System	††KA2160	56 DIP-SH	VIF amp, PLL video detector, AGC, AFT, SIF detector, Video amp, Clamp, Black detector, Delay line, DC contour, Chroma demodulator, APC, Matrix, ACC, Tint, Sync separator, H-out, AFC, X-ray $32f_H$ VCO, Vert. Out, OSD interface
PAL Chroma + Deflection + Video System	KA2154	42 DIP	ACC amp./detector, Killer detector, Phase detector, CW OSC, Demodulator, Sawtooth-Gen, APC, X-ray protection, Hori OSC/drive, Vert OSC/amp, Reverse amp
PAL/NTSC 1 Chip System	††KA2161	54 DIP-SH	VIF amp, Video detector, AGC, AFT, SIF detector, ATT, AF amp, Video amp, DL amp, Chroma demodulator, APC, Matrix, ACC, Sync separator, H-out, AFC, $32f_H$ VCO, Vert. out, 50/60Hz, X-ray
Vertical System	KA2130A	10 DIP H/S	Vert OSC/driver/output, Sawtooth generator
Vertical Output	KA2131	10 SIP H/S	Driver, Output, Flyback generator, Pulse shaper
Horizontal System	KA2135	12 SIP	Polarity SW, AFC, Hori OSC/preamp, Pulse width adj, X-ray protector
Deflection System	KA2133	16 DIP H/S	Vert OSC/driver/output, Sawtooth generator, Hori OSC/pre-driver, AFC
	KA2134	18 DIP	Sync separator, Noise detector, Hori/OSC/buffer, AFC, Vert OSC/driver/amp, Ramp generator, X-ray protector
	KA2138	20 DIP	Vert OSC, Ramp generator, Sampling type, DC voltage control, Horiz OSC, AFC X-ray protector, Horiz phase shifter, Horiz pulse duty setting
DC Volume & Tone Control	KA2107	12 SIP	Tone control, Balance control, Volume control, Output amp
Sync Separator	KA2605	9 SIP	Phase Inverter, Hori sync separator, Vert sync separator, Composite sync separator, Vertical filter, Horizontal filter
	KA2606	9 SIP	Phase Inverter, Hori sync separator, Hori sync compensation, Composite sync separator, Vertical filter, Horizontal filter

† New Product †† Under Development

B. VCR Only

Application	Device	Package	Circuit Function
REC/PB-AMP	KA8112	22 DIP SH	Current amp, Pre-amp, HD SW amp (REC/PB)
	††KA8116	20 SOP	2ch REC amp, 4ch PB amp, HD SW amp (REC/PB), REC amp gain CTL SW. envelope det.
Luminance Processor	KA8113	30 DIP SH	AGC, SYNC sep, Detail enhancer, Main emphasis, Non-linear empha, 75Ω driver, FM AGC, DOC, Line noise can, Noise can, Picture control
Chrominance	KA8104	30 DIP SH	$320f_H/321f_H$ VCO, REC LPF, Edit CTL, $2f_{SC}$, PB input level compensator, Field start inhibit, High speed APC circuit, APC Ref CTL
	†KA8114	30 DIP SH	Rec sync gate, Limiter, PB sync gate, Timing gen. doubler
	††KA8115	24 DIP SH	PB amp, De-empha, Killer, 4.43M VXO/XO, 2 f_{SC} 320/321 f_H VCO, PB APC, REC AFC, REC APC, Side lock det, ACC det/amp, BGP, 6dB amp, N/P/S det, 3rd lock protect
	††KA8117		KA8114 + Filters
Y/C 1 Chip	††KA8111	36 DIP SH	YNR, Y/C Comb, 3MLPF, Clamp, FBC, Detain enhancer, NL-empha, Main-empha, W/D clip, FM MOD (Demod), SYNC sep, AGC, FM AGC, D.O.C. double limiter, Main de-empha, NL de-empha, Double HPF noise canceller, Picture CTL, Y/C MIX
			REC killer, IMLPF, ACC DET/AMP, Burst empha (De-empha), 3.58M BPF, PB killer, 4.21M BPF, REC APC, PB APC, REC AFC, $320/321f_H$ VCO, VXO/XO, BGP
Audio Processor	KA2983	18 DIP	REC/PB Pre-amp, Line amp, ALC, Analog SW, Mute CTL, REC amp
	KA8401	24 ZIP SH	SP/EP SW, REC/PB SW, PB/EE SW, REC/EE SW, Mute CTL, REC amp
	††KA8406	80 QFP	Hi-Fi 1 Chip
Servo Controller	KA8316	56 DIP SH	Speed/Phase servo for drum & capstan motor, 70-search speed, Fine slow, QV position, VISS code W/R
	KA8319	56 DIP SH	KA8316 + D-PG/D-FG amp
	†KA8320	60 QFP	KA8319 + HD logic select
C-FG & CTL Amp	KA8302	12 SIP	CTL amp, FG amp, Doubler, Schmitt trigger
Motor Driver	KA8301	10 SIP H/S	Pre amp, Driver, Logic circuit
	KA8304	12 SIP H/S 12 ZIP H/S	Control amp, CW/CCW, Hall amp, 2-phase motor driver
	KA8306	10 SIP H/S	CTL circuit, Protect circuit, Dual motor driver
	KA8310	20 ZIP	2 Phase DC brushless hall motor driver, CTL amp, Hall amp, CW/CCW, Driver, TSD
	†KA8311	30 DIP SH H/S	3 phase DD Motor driver
RF Modulator	KA2981	16 DIP	Video clamp, White clip, AM modulator, Sound FM modulator, Carrier OSC with SAW channel select SW, 6.2V
	††KA2990	16 SOP	Video clamp, White clip, AM mod, Sound FM mod, 5.0V Switcher
	††KA2982	20 SOP	Video clamp, White clip, AM/FM mod, Sound AM/FM mod, 5.0V

† New Product †† Under Development

D. General Purpose for Video

Application		Type	Package	Circuit Function
VIF + SIF System		KA2913A	16 DIP	VIF amp, Limiter, Video detector, Video amp, IF AGC, Forward RF AGC, Noise canceller
		KA2917	16 DIP	Reverse RF AGC version of KA2913A
		KA2914A	24 DIP	VIF amp, Limiter, Video detector, Video AFT, IF AGC, Reverse RF AGC, SIF amp, SIF limiter, Sound detector
		KA2918	24 DIP	Forward RF AGC version of KA2914A
		KA2919	30 SDIP	VIF amp, Video detector, AFT, IF AGC, Reverse RF AGC, Noise canceller, Video amp, SIF detector, Limiter amp, Mute, Attenuator, AF amp
		KA2922	20 DIP	VIF amp, Video det, AFT, Noise canceller, IF AGC, Forward RF AGC, Limiter amp, FM det, Mute
		KA2923	20 DIP	VIF amp, Video det, AFT, Noise canceller, IF AGC, Reverse RF AGC, Limit amp, FM det, Mute
Quasi-IF		KA2924	20 SDIP	VIF amp, Quasi-IF amp, Video detector, SIF detector, AGC, AFT, B/W noise canceller
A/V Switch		KA2186	8 DIP	Switching circuit reference (Low impedance)
		KA8402	7 SIP	2-Input switch
		KA8403	9 SIP	3-Input switch
PLL + Prescaler	NTSC	KA2185	20 DIP	Pre-amplifier, 1/8, 1/32, 1/33 prescaler counter, OSC, PLL, Shift register
	PAL	KA2187	20 DIP	Pre-amplifier, 1/8, 1/32, 1/33 prescaler programmable divider, PLL
Remocon	Tx	KS5803A	16 DIP	Key in/output, Driver, Output control, OSC, Data register, Controller
		KS5803B	20 SOP	
		KS5410	20 SOP	Oscillatgor, Key input, Data code generator, Timing generator, Strobe signal generator, REM-out
	Rx Pre-Amp	KA2181	8 SIP	ALC, Input separation stage, Output gain control
		KA2183	8 SIP	ALC, Input separation stage, Output gain control, Low voltage use amp
		KA2184	8 SIP/8 SOP	ALC, Limit amp, BPF, Detector, Hustereisis comparator
		††KA2193	8 SOP	ALC, Limit amp, BPF detector, Hysterisis Comparator (A Min. number of parts is required)
Character Generator		KS5512	32 SOP	Sync separator & OSC, Character memory & ROM, Data/address SW, Video output, NTSC/PAL = 8 colors each
		†KS5513	32 SDIP	Character generator + Sync detector
Sound MPX	Two Carrier System in Korea	KA2268	28 DIP	SIF amp, IF limiter, IF decoder, LED driver, Mode SW, Matrix, VCO
		KA22682		

1

3. TOY APPLICATION

A. RC Toy Car

Device	Function					Package	V_{CC}(V)	A_V (dB)	Operating Mode	Application
	F/W	B/W	Stop	L/R Turn	Turbo					
KA2303	O	O	O			9 SIP	2.5-10	65	RF	3 Function RC TOY CAR (RX)
KA2305A	O	O	O			12 SIP	3-18	58	RF + PWM	3 Function RC TOY CAR (RX)
KA2309	O	O	O	O	O	16 DIP	3-18	58	RF + FM + PWM	7 Function RC TOY CAR (RX)
KA2310	O	O	O	O	O	9 SIP	6-12		RF + FM + PWM	KA2309 Transmitter
KA2311	O	O	O	O	O	16 DIP	3-18	65	RF + FM + PWM	Full Function RC TOY CAR (RX) (L/R Turn on stop state)
KA2312	O	O	O	O	O	9 SIP	6-12		RF + FM + PWM	KA2311 Transmitter
KA2314	O	O	O	O	O	9 SIP	6-12		RF + FM + PWM	KA2309/11 TX, Gun TX

† New Product
†† Under Development

4. TELECOMMUNICATION APPLICATION

Application	Type	Package	Circuit Function
Tone Ringer	KA2410 KA2411	8 DIP	Adjustable warbling and 2 frequency tone External triggering or ringer disable (KA2410) Adjustable supply initiating current (KA2411) Built-in hysteresis
Tone Ringer with Bridge Rectifier	KA2418 KA2428	8 DIP	Protect against over voltage Low current consumption Allow the parallel operation of 4 devices Built-in hysteresis External component's are minimized High output voltage
DTMF Dialer	KS5808A	16 DIP	Direct telephone line operation Standard 2 of 8 key board use Tone output: Bipolar output Mute output: N-CH open drain
	KS5809	16 DIP	Low power dissipation Single contact key board use Tone output: Bipolar output Mute output: N-CH open drain
	KS5810	16 DIP	Low power dissipation Single contact key board use 31 digit redial (Column 4 keys) Tone output: Bipolar output Mute output: N-CH open drain
	KS5811	16 DIP	Low power dissipation Standard 2 of 8 key board use 31 digit redial (# key) Tone output: Bipolar output Mute output: N-CH open drain
	KA2413	16 DIP	Wide operating line voltage and current range Short start up time External components are minimized Internal protection of all inputs
Pulse Dialer with Redial	KS5851/52	18 DIP	KS5851: Pin 2; V_{ref} KS5852: Pin 2; Tone output RC oscillator used as frequency reference DP output, 32 digit redial High quality si-gate CMOS process
	KS5853	16 DIP	DP output RC oscillator used as frequency reference 32 digit redial High quality si-gate CMOS process
DTMF/Pulse Switchable Dialer	KS58002 KS58006	22 DIP/22 SDIP 18 DIP/20 SOP	Tone/Pulse switchable dialing, touch key or slide switch 32 digit redialing & PABX auto-pause time Make/break ratio pin selectable
	††KS58008	18 DIP/20 DIP 22 DIP	One touch redial possible Hands free & Hold function possible Tone/pulse switchable dialing, touch key or slide switch 32 digit redialing & PABX auto-pause time Make/break ratio pin selectable

1

4. TELECOMMUNICATION APPLICATION (Continued)

Application	Type	Package	Circuit Function
DTMF/Pulse 3 No. Emergency Dialer	†KS58505	18 DIP/22 DIP	3 No × 16 digit memory & 32 digit redial Including PABX auto-pause time Make/break ratio pin selectable On/Off hook memory Tone/pulse switchable dialing, touch key or slide switch
DTMF/Pulse Switchable 10 No Memory	†KS58500	22 DIP/22 SDIP	10 No × 16 digit memory & 32 digit redial Including PABX auto-pause time Make/break ratio pin selectable Key in ton possible
	†KS58503	18 DIP/20 SOP	10 No × 16 digit memory & 32 digit redial Including PABX auto-pause time Make/break ratio pin selectable
	†KS58514	18 DIP/20 DIP 22 DIP	10 No × 16 digit memory & 32 digit redial Including PABX auto-pause time Make/break ratio pin selectable Flash time pin selectable
DTMF/Pulse Switchable 15 No Memory	†KS58527	20 DIP/22 DIP	10 No × 16 digit indirect memory 4 No × 16 digit direct memory Flash time pin selectable Hands free & Hold function possible
DTMF/Pulse Switchable 20 No Memory	†KS58536	28 DIP/28 SOP	20 No × 16 digit memory & 32 digit redial Make/break ratio pin selectable Flash function Repertory dialing is accessed by direct key or indirect key
DTMF Dialer	KS58015	14 DIP/14 SOP	Direct interface with microprocessor Generates 16 standard tones Binary data inputs with latches Very low total harmonic distortion
Speech Network	KA2412A	14 DIP	Transmit/Receiver amplifier Side tone control On chip regulator
Low Voltage Speech Network with Dialer Interface	KA2425A	18 DIP	Low Voltage Operation (1.5V) Tx, Rx & side tone gain set by external resistor Loop length equalization for Tx, Rx & sidetone Provides regulated voltage for CMOS dialer DTMF level adjustable with a single resistor A: Mute active low B: Mute active high
Speech Network with Dialer Interface	KA8500A KA8501A	16 DIP	Adjusts sending and receiving attenuation length Provides regulated voltage for dialer Linear interface for DTMF A: Mute active high, B: Mute active low
	KA8504	16 DIP	Low line current operation DTMF signal interface Mute function Easy gain control
Low Voltage Speech Network	KA8503	18 DIP	Adjust sending and receiving attenuation length Mute function Side tone balance network constitution Low voltage operating AC impedance matching
Speaker Phone with Speech Network	KA8601	48 SDIP	High attenuator gain range (52dB) Microphone amp gain set by external components Regulated voltage for dialer Low operating voltage (1.5V: Speech) Mute input for DTMF dialing

4. TELECOMMUNICATION APPLICATION (Continued)

Application	Type	Package	Circuit Function
Low Voltage Audio Amplifier	KA8602	8 DIP/8 SOP	Easy gain control Low distortion Mute function
DTMF Receiver	KT3170	18 DIP	Full DTMF Receiver Provides DTMF high and low group filtering Dial tone suppression Adjustable acquisition and release times Integrated bandsplit filter and digital decoder functions High quality and performance Single +5 Volt power supply
Tone Decoder	KA567/L	8 DIP/8 SOP	Touch tone decoding Sequential tone decoding Communication paging High stable center frequency KA567L: Micropower (4mW at 5V) dissipation
FM Transmitter	†KA8508/A	16 DIP	Operating voltage range: 2.8~9V Typical supply current KA8508: 2.9mA, KA8508A: 3.8mA −30dB power output to 60MHz using direct RF output KA8508A includes power amplifier
FM Receiver	KA3361	16 DIP/16 SOP	Operating voltage range: 2.5~7V Typical supply current: 4mA at 4V Excellent input sensitivity (−3dB limiting, 2.0μVrms/typ) Communication paging
	†KA8509	24 SDIP	Operating voltage range: 2~7V Typical supply current: 4.5mA at 5V Excellent input sensitivity (−3dB limiting, 0.7μVrms typ.) RSSI has 60dB dynamic range, slope of 100mA/dB
Compander	†KA8507	20 DIP/20 SOP	Operating voltage range: 2.4~7V Easy gain control Mute/Bypath logic Data In/Out pin
PLL	†KS8802	16 DIP	15 channel selectable (Both Tx/Rx) Include oscillation circuit with external X-tal (10.24MHz) 5KHz output for guard tone Standby function for saving power
1 Chip Codec	†KT8554 †KT8557	16 CERDIP †16 DIP	Exceeds all D3/D4 and CCITT spec. Complete CODEC and filtering system including ±5V operation Low power consumption TTL and CMOS compatible logic
TSAC	KT8555	20 CERDIP	Controls up to eight 1 CHIP CODEC/Filters Low power consumption Single 5V operation Up to 32 time slots per frame
4×4 Crosspoint Switch	KT8592	16 DIP	4×4 matrix-array with control memory Low on resistance $2V_{p-p}$ analog signal capability Less than 1% total distortion at 0dBm
12×8 Crosspoint Switch	KT8593	40 DIP	12×8 matrix-array with control memory Low on resistance $2V_{p-p}$ analog signal capability Less than 1% total distortion at 0dBm

4. TELECOMMUNICATION APPLICATION (Continued)

Application	Type	Package	Circuit Function
Line Driver	KS5788	14 DIP 14 SOP	Conformance EIA standard No. RS-232C & V.24 (CCITT) Quad line driver Interface between data terminal equipment (DTE) and data communication equipment (DCE) Current limited output: ±10mA typ. Power-off source impedance 300 ohms min. Compatible with DTL and TTL HCTLS families Flexible operating supply range KS5788: Low power CMOS version
Line Receiver	KS5789A	14 DIP 14 SOP	Conformance EIA standard No. RS-232C & V.24 (CCITT) Quad line receiver Interface between data terminal equipment (DTE) and data communication equipment (DCE) Input signal range: ±30 volts Input threshold hysteresis built in Response control a) Logic threshold shifting b) Input noise filtering KS5789A: Low Power CMOS version
Line Transceiver	KA2654	8 DIP	Conformance EIA Standard No. RS-232C & V.24 (CCITT) One Driver & One Receiver on chip Wide supply voltage (±4.5V-±15V) Including reference regulator Response control provides TTL compatible
Peripheral Driver Array	KA2655/6/7/8/9	16 DIP 16 SOP	Including 7 NPN darlington-connected transistors These arrays are well suited for driving lamps, relays, or printer hammers in a variety of industrial and consumer applications. High breakdown voltage and internal suppression diodes insure freedom from problems associated with inductive loads
Fluorescent Display Driver	KA2651	18 DIP	Consisting of 8 NPN darlington output stages and associated common-emitter input stages Digit or segment drivers Low input current, internal output pull-down resistor High output breakdown voltage Single or split supply operation
8-Channel Source Driver	KA2580A	18 DIP	TTL, CMOS, PMOS, NMOS compatible High output current ratings Internal transient suppression Efficient input/output pin structure Drive telephone relays, incandescent lamps, and LEDS
	KA2588A	20 DIP	KA2588A: Separated logic and driver supply line
Universal Asynchronous Receiver and Transmitter (UART)	KS5824 KS5812	24 DIP 40 DIP	The data formatting and control to interface serial asynchronous data communications between main system and subsystems. Low power, high speed CMOS process Serial/parallel conversion of data 8 and 9 bit transmission Programmable control register Optional ÷1, ÷16, and ÷64 clock modes Peripheral/modem control functions Double buffered Included 4 UART in one chip (KS5812)
8-Bit Latch & Driver	†KT8518	16 DIP	8-bit addressable latched driver

† New Product †† Under Development

5. VOLTAGE REGULATOR

A. 3-Terminal Fixed Positive Voltage Regulator

Function	Type	Package	Features	Application
Very High Output Current ($I_O = 3A$)	KA78TXX	TO-220	Output current in excess of 3A Internal thermal overload protection Internal short circuit current limiting	5V, 6V, 8V, 12V, 15V and 18V fixed output voltage
High Output Current ($I_O = 1A$)	KA78XX series	TO-220	Maximum output current 1A External components are minimized Internal protection circuit for output short Positive voltage regulator Variable application control	5V, 6V, 8V, 9V, 10V, 11V, 12V, 15V, 18V and 24V fixed output voltage
	KA340XX series	TO-220	Output current in excess of 1A Very low line regulation: 0.01% Very low load regulation: 0.3%	5V, 6V, 8V, 9V, 10V, 11V, 12V, 15V, 18V and 24V fixed output voltage
Medium Output Current ($I_O = 500mA$)	KA78MXX series	TO-220	Maximum output current 500mA External components are minimized Internal protection circuit for output short Positive fixed output voltage regulator Variable application circuit	5V, 6V, 8V, 10V, 12V, 15V, 18V, 20V and 24V fixed output voltage
Low Output Current ($I_O = 100mA$)	KA78LXXA series	TO-92	Output current in excess of 100mA External components minimized Internal protection circuit for output short Positive voltage regulator Variable application circuit	5V, 8V, 9V, 12V, 15V, 18V and 24V fixed output voltage

B. 3-Terminal Fixed Negative Voltage Regulator

Function	Type	Package	Features	Application
High Output Current ($I_O = 1A$)	KA79XX series	TO-220	Output current in excess of 1A Internal thermal overload protection Internal short circuit current limiting	−2V, −5V, −6V, −8V, −9V, −10V, −12V, −15V, −18V and −24V fixed output
Medium Output Current ($I_O = 500mA$)	KA79MXX series	TO-220	Output current in excess of 500mA Internal thermal over load protection Internal short circuit current limiting	−5V, −6V, −8V, −10V, −12V, −15V, −18V and −24V fixed output voltage
Low Output Current ($I_O = 100mA$)	KA79LXXA	TO-92	Output current in excess of 100mA Internal short circuit current limiting External components minimized	−5V, −12V, −15V, −18V and −24V fixed output voltage

† New Product
†† Under Development

C. Adjustable Voltage Regulator

Function	Type	Package	Features	Application
Precision Voltage Regulator	KA723	14 DIP 14 SOP	Positive or negative supply operation Series, shunt, switching or floating operation 0.01% line and load regulation Output current up to 150mA without external pass transistor	Output voltage adjustable from 2 to 37V
Adjustable Regulator	KA317	TO-220	Output current in excess of 1.5A Positive output adjustable from 1.2V to 37V Internal short circuit current limiting	Floating operation for high voltage operation Eliminates stocking many fixed voltages
	KA337	TO-220	Output current in excess of 1.5A Negative output adjustable from −1.2V to −37V Internal short circuit current limiting	Floating operation for high voltage operation Eliminates stocking many fixed voltages
	KA350	TO-3P	Output current in excess of 3A Positive output adjustable from 1.2V to 33V Internal short circuit current limiting	Floating operation for high voltage operation Eliminates stocking many fixed voltages
	KA317L	TO-92	Output current in excess of 100mA Positive output adjustable from 1.2V to 37V Internal short circuit current limiting	Floating operation for high voltage operation Eliminates stocking many fixed voltages
	KA317M	TO-220	Output current in excess of 500mA Positive output adjustable from 1.2V to 37V Internal short circuit current limiting	Floating operation for high voltage operation Eliminates stocking many fixed voltages
	KA337L	TO-92	Output current in excess of 100mA Negative output adjustable from −1.2V to −37V Internal short circuit current limiting	Floating operation for high voltage operation Eliminates stocking many fixed voltages

D. Low Dropout Voltage Regulator

Function	Type	Package	Features	Application
Low Dropout Positive Regulator	KA76L05	TO-92 TO-220	Input-to-output voltage differential of less than 0.6V at 100mA Output current in excess of 100mA 60V load dump protection −50V reverse transient protection Internal current limiting with thermal shutdown	5V output voltage

†† Under Development

E. PWM Control IC

Function	Type	Package	Features	Application
Voltage Mode PWM Control IC	KA7500	16 DIP	Complete PWM power control circuitry Dead-time control Complementary output Output current up to 200mA	Voltage inverter Voltage step-down Voltage step-up Half-bridge converter Full-bridge converter
	KA3524	16 DIP	Complete PWM power control circuitry Internal short circuit current limiting Complementary output Output current up to 100mA	Voltage inverter Voltage step-down Voltage step-up Half-bridge converter Full-bridge converter
	KA3525A	16 DIP	Adjustable dead-time control Internal soft-start Separate oscillator sync terminal Pulse-by-pulse shutdown Input undervoltage lockout with hysteresis	Voltage inverter Voltage step-down Voltage step-up Half-bridge converter Full-bridge converter Push-pull converter
	KA3526B	18 DIP	Programmable dead time Under voltage lockout Programmable soft-start Digital current limiting TTL/CMOS compatible logic parts	Voltage inverter Voltage step-down Voltage step-up Half-bridge converter Full-bridge converter Push-pull converter
Current Mode PWM Control IC	KA3842/3	8 DIP 14 SOP	Automatic feed forward compensation Pulse-by-pulse current limiting Under voltage lockout Double pulse suppression High current totem pole output Maximum duty cycle of 100%	Voltage inverter Voltage step-down Voltage step-up Flyback converter Forward converter
	KA3844/5	8 DIP 14 SOP	Automatic feed forward compensation Pulse-by-pulse current limiting Under voltage lockout Double pulse suppression High current totem pole output Maximum duty cycle of 50%	Voltage inverter Voltage step-down Voltage step-up Flyback converter Forward converter
	KA3846	16 DIP	Programmable pulse-by-pulse Current limiting Double pulse suppression Under voltage lockout Soft-start capability Automatic feed forward compensation	Voltage inverter Voltage step-down Voltage step-up Half-bridge converter Full-bridge converter Push-pull converter
Controller for SMPS	KA7577	16 DIP	Over voltage protection Pulse by pulse current limiting Over current limiting Output drive current of ±2A	Voltage inverter Voltage step-down Voltage step-up Flyback converter Forward converter

E. PWM Control IC (Continued)

Function	Type	Package	Features	Application
Controller for SMPS	KA7511	9 SIP	Low start-up current Direct control of switching transistor Protective circuit for the event of errors Collector current-proportional to base current input	Flyback converter for TV and monitor SMPS
	KA7515	8 DIP	Fold-back characteristic provides overload protection Burst operation under short-circuit Loop error protection Soft-start for quiet start-up Chip over-temperature protection	Flyback converter for TV and VTR SMPS
DC to DC Converter	KA34063A	8 DIP	Low standby current Short circuit current limiting Output switch current of 1.5A Output voltage adjustable Internal temperature compensated reference	Voltage inverter Voltage step-down Voltage step-up

6. VOLTAGE REFERENCE

Function	Type	Package	Features	Application
Adjustable Reference	KA431	TO-92 8 DIP 8 SOP	Programmable output voltage from V_{ref} to 36V Voltage reference tolerance: ±1.0% Low output noise voltage	Switching regulator Constant current source Constant current sink
Reference	KA336	TO-92	Adjustable 4V to 6V Low temperature coefficient 0.6Ω dynamic impedance Fast turn-on	Adjustable shunt regulator Precision power regulator

7. OPERATIONAL AMPLIFIER

Function	Type	Package	Features	Application
OP AMP	KA741/I/E	8 DIP 8 SOP	Internal frequency compensation Short circuit protection	Comparator, DC amp, Multivibrator, Summing amp, Integrator or differentiator, Narrow band or BPF
	KA301A	8 DIP 8 SOP	Short circuit protection External frequency compensation	Variable capacitance Multiplier Sine wave oscillator
	KF351	8 DIP 8 SOP	Internally trimmed offset Voltage: 10mV Low input bias current High input impedance: $10^{12}\Omega$ High slew rate: 13V/μs Wide gain bandwidth: 4MHz	Hi-Zin inverting amp Ultra low duty cycle Pulse generator Sample and Hold
Dual OP AMP	KA4558/I	8 DIP 8 SOP 9 SIP	Internal frequency compensation Low noise operation	Phone pre-amplifier Tape playback amplifier
	KA1458/I	8 DIP 8 SOP 9 SIP	Internal frequency compensation Short circuit protection	Filter Schmitt trigger Comparator Multivibrator
	KA358/A KA258/A KA2904	8 DIP 8 SOP 9 SIP	Internal frequency compensation for unit gain Large DC voltage gain Wide power supply range Single supply operation	DC summing amplifier Power amplification RC active bandpass filter Compatible with all forms of logic.
	KA5532	8 DIP	Low input noise voltage High gain bandwidth: 10MHz High slew rate: 9V/μs Large supply voltage range: $\sim \pm 3$ to ± 20V	DC Amp Telephone channel amplifiers Audio equipment
	KA9256	10 SIP H/S	Internal current limiting: $I_{SC} = 350$mA Internal frequency compensation Minimal cross over distortion	High power amplifier CD motor driver
	KF442	8 DIP 8 SOP 9 SIP	Low supply current: 500μA (max) Low input bias current High input impedance High gain bandwidth: 1MHz High slew rate: 1V/μs	Active filter DC summing amplifier Oscillator
	KF353	8 DIP	Low bias current Wide band width High input impedance: 45MHz High slew rate: 13V/μs	Sample and hold D/A converter integrator

1

OPERATIONAL AMPLIFIER (Continued)

Function	Type	Package	Features	Application
Quad OP AMP	KA324/A KA224/A KA2902	14 DIP 14 SOP	Internal frequency compensation Wide supply voltage range Single supply: DC 3V ~ 32V Dual supply: DC ± 1.5V ~ ± 16V	Audio power booster DC amp, Multivibrator Switch, Comparator Schmitt trigger
	KA348 KA248	14 DIP 14 SOP	Each amplifier is functionally equivalent to the LM741C Pin compatible with LM324 Short circuit protection	Comparator with hysteresis Voltage reference
	KA3403 KA3303	14 DIP 14 SOP	Class AB output stage for minimal crossover distortion Single or split supply operation Internal frequency compensation	Comparator with hysteresis BI-Quad filter
	KF347	14 DIP 14 SOP	Low bias current Wide gain bandwidth: 4MHz High slew rate: 13V/μs High input impedance	D/A converter Sample and hold Integrator

8. VOLTAGE COMPARATOR

Function	Type	Package	Features	Application
Single Comparator	KA311	8 DIP 8 SOP	Operates from single 5V supply Maximum input current: 250mA Maximum offset current: 50nA Differential input voltage range: ±30V	Multivibrator output is compatible with DTL and as well as MOS circuits voltage controlled oscillator
	KA710/I	14 DIP	Low offset and thermal drift Compatible with practically all types of integrated logic	Line receiver A/D converter Memory sense amplifier
Dual Comparator	KA393/A KA2903 KA293/A	8 DIP 8 SOP 9 SIP	High precision comparators Reduced V_{OS} drift over temperature Eliminates need for dual supply Allows sensing near ground Compatible with all form of logic Power drain suitable for battery operation Low input biasing current: 25nA Low output saturation voltage 250mA	Output voltage compatible with TTL, DTL, ECL and CMOS logic system Basic comparator Pulse comparator MOS clock driver
	KA319 KA219	14 DIP	Two independent comparators Operates from a single 5V High common mode slew rate	Relay driver Window detector
	KA711/I	14 DIP 14 SOP	Separate differential input and single output Strobing each side	Sense amplifier for core memory Dual comparator with ORed output Double-ended limit detector
Quad Comparator	KA339/A KA2901 KA239/A KA3302	14 DIP 14 SOP	Wide single supply voltage range or dual supplies Very low supply current drain (0.8mA)-independent of supply voltage (2mW/Comparator at +5V DC) Low input biasing current: 25nA Input common-mode voltage range included GND Low output saturation voltage 250mV at 4mA	Compatible with all forms of logic Bi-stable multivibrator One-shot multivibrator Time delay generatory Square wave oscillator Pulse generator Limit comparator Crystal controlled oscillator

9. TIMER

Function	Type	Package	Features	Application
Single Timer	KA555	8 DIP 8 SOP	Maximum operating frequency: 500KHz Adjustable duty cycle	Precision timing Pulse generator
	KS555 KS555H	8 DIP 8 SOP	Low power consumption by using CMOS process High speed operation Wide operation supply voltage: 2 to 18 volts Pin compatible with KA555	Precision timing Pulse generator
Dual Timer	KA556	14 DIP	TTL Compatible Dual KA555	Time delay generation
	KS556	14 DIP	Low power consumption by using CMOS process Pin compatible with KA556	Time delay generation
Quad Timer	KA558	16 DIP	Wide supply voltage range: 4.5 to 16V 100mA output current per section Time period equal RC	Quad monostable Sequential timing Precision timing

10. MISCELLANEOUS

Function	Type	Package	Features	Application
Voltage to Frequency Converter	KA331	8 DIP	V-F Conversion F-V Conversion Wide range of full scale frequency: 1Hz to 100KHz	Light intensity to frequency converter Temperature to frequency converter
Earth Leakage Detector	KA2803	8 DIP	Low power consumption Built-in voltage regulator 1mA output current pulse to trigger SCR's	Earth leakage detector
Zero Voltage Switch	KA2804	8 DIP	Very few external compontents Reference voltage output Supply voltage control	On-Off temperature control Time proportional temperature control
Earth Leakage Detector	KA2807	8 DIP	Full advantage of the UL943 Direct interface to SCR Trim time in normal	Earth leakage detector
Voltage Detector Controller	KA7533	TO-92	Detecting against error operations at the power ON/OFF Resetting function for the low voltage microprocessor Checking low battery	Low battery checking
Lead Battery Charge Controller	KA7560	Chip 24 SOP	Charging current linearly decreases when battery charging ends, by detecting battery voltage charging time is possible in about 1 hour charging current can be adjusted by selecting external resistor value properly	Lead battery charging
Power Factor Controller	KA7514	8 DIP/ 8 SOP	An active power factor correction Micro power start up Under voltage lock out Totem-pole output	AC to DC converter Electronic ballast

DATA CONVERTER

Function	Device	Package	Feature	Application
A/D + D/A Converter	KSV3110	40 DIP	High speed 8-bit A/D + 10-bit D/A converter	Image processing video graphics
A/D Converter	KSV3208	28 DIP	High speed 8-bit A/D converter	
	†KAD0228	24 SOP	High speed 8-bit CMOS A/D converter	
	KAD0206	30 SDIP 32 SOP	High speed 6-bit A/D converter	
	††KAD0216	32 DIP	18-bit A/D converter	General purpose Digital Audio
DMM A/D	†KAD7001	80 QFP	3 3/4-digit A/D converter	DMM
	†KAD7000	48 QFP	Micom Interfaceable 3 3/4-digit A/D converter	
D/A Converter	KDA3310	32 PLCC/28 DIP	High speed 10-bit D/A converter	Image processing video graphics
	†KDA0408	42 SDIP	High speed triple 8-bit D/A converter	
	KDA0406	28 SOP 28 SDIP	High speed triple 6-bit D/A converter	
	††KDA0318	32 SOP	18-bit D/A converter for CDP	CDP, LDP
	KDA0316	20 DIP/SOP	16-bit D/A converter for CDP	
	††KDA0317	44 QFP	16-bit D/A converter for CDP	
	KDA0800/08	16 DIP/SOP	8-bit D/A converter	General purpose
RAMDAC	††KDA0475	44 PLCC	6-bit low power RAMDAC	Lap top PC Note book PC
	††KDA0477	44 PLCC	8-bit low power RAMDAC	
	KDA0476	28 DIP/32 PLCC/ 44 PLCC	6-bit RAMDAC	VGA
	††KDA0473	68 PLCC	8-bit true color RAMDAC	True Color Graphic
	†KDA0458	84 PLCC	8-bit RAMDAC	Workstation
	KDA0471	44 PLCC	6-bit RAMDAC with overlay register	VGA
	KDA0478	44 PLCC	8-bit RAMDAC wich overlay register	

† New Product
†† Under Development

1

1. CMOS LCD Watch

Device	Display					Function				Additional Features				Electrical Characteristic			Remark
	Digit	Day Flags	Marks	Duplexed LCD	Triplexed LCD	Basic 5 Function	Day Type	Year	Alarm	Snooze	Chronograph	Chime	Remark	V_{DD}(V)	I_{DD}(μA) Typ.	I_{DD}(μA) Max.	
KS5120	3.5	—	—	*	—	*	—	—	—	—	—	—		1.5	0.8	1.5	Internal Capacitor
KS5195	4	—	4	*	—	*	—	—	*	—	—	*		1.5	1.0	2.0	
KS5191	6	7	4	*	—	*	Flag	—	*	*	*	—	Chrono (1/100 sec, 24HR)	1.5	1.0	2.0	Internal Capacitor
KS5199A	3.5	—	—	*	—	*	—	—	—	—	—	—		1.5	0.8	1.5	
KS5112	6	—	1	—	*	*	—	—	—	—	—	—		1.5	0.8	1.5	Internal Capacitor
KS5121	3.5	—	—	*	—	*	—	—	—	—	—	—		1.5	0.8	1.5	1.5V LCD use. colon flash option

2. CMOS Analog LCD Watch

Device	Display			Function	Electrical Characteristic			Remark
	Hand	Segment	LCD duty		V_{DD}(V)	I_{DD}(μA) Typ	I_{DD}(μA) Max	
KS5113	3	120	1/6	3	1.5	1.5	2.5	Internal Capacitor

3. Analog Watch

Device	PAD	Time keeping	Time stability(ppm)	V_{DD}(V)	I_{DD}(nA) Typ	I_{DD}(nA) Max	Remark
KS5243	10	Trimmer cap(OI)	Typ; 0.1	1.5	170	300	Motor output : Mask option

4. CMOS Analog Clock

Device	Feature	V_{DD} (V)	I_{DD}(μA)		Osc. (Hz)	Package	Remark
			Typ	Max			
†KS5223	M: 1000 E,Q: 46.9ms, F,R: 31.2ms N: 23.4ms	1.5	1.0	2.0	32,768	8 DIP CHIP	Multi Option Type
†KS5224	M: 62.5ms	1.5	1.0	2.0	32,768	8 DIP CHIP	Multi Option Type

5. Analog Melody + Clock (ONE CHIP)

Device	Standard Type	Song List	Feature	V_{DD} (V)	I_{DD} (μA)		OSC Hz	Package	Remark
					Typ	Melody Operating			
KS5213	KS5213A	Minute (Bach)	•Selectable output pulse width by binary option (15.6 msec, 23.4 msec, 31.2 msec, 46.8 msec) •Output pulse periode: 2 sec (0.5 Hz) •Snooze function: 256 sec •Melody or ALARM selection	1.5	1.0	700	32,768	Chip 16 DIP	Alarm sound: 886 × 8 × 0.5Hz Dual tone melody Digital ENV built in

1

6. Melody

Device	Standard Type	Song List	Time Base (KHz)	Electrical Characteristic			Package	Remark
				V_{DD}(V)	I_{DD} (μA) Stand-by	I_{DD} (μA) Operating		
†KS531/ †KS5321	KS531/KS5321A KS531/KS5321B	Symphony, #9 "choral" 4th Mov (Beethoven) Chime (Ding Dong Sound)	125	1.5 (3.0)	0.5 (max)	0.5mA	Chip 8 DIP (KS5321) TO-92 (KS531)	Speaker drive Digital ENV built in Dual tone
KS537/ KS5327	KS537/KS5327A KS537/KS5327B KS537/KS5327C KS537/KS5327D KS537/KS5327E KS537/KS5327F †KS537/KS5327G KS537/KS5327H KS537/KS5327I KS537/KS5327J †KS537/KS5327K KS537/KS5327L KS537/KS5327M †KS537/KS5327N KS537/KS5327O	Jingle bells For ellse Happy birthday to you Home sweet home Cuckoo's waltz Westminster Mary had a little lamb Choral symphony Oh, susanna Music box dancer Love me tender, love me true Arirang Green sleeves Twinkle twinkle little star Hand in hand	65	1.5 (3.0)	0.1	15	Chip 8 DIP (KS5327) TO-92 (KS537)	Speaker or piezo drive
KS5328	KS5328A	For elise A maidens's prayer	65	1.5 (3.0)	0.5 (max)	50	Chip 16 DIP	LED drive END/BUSY signal output -Dual tone
	KS5328B	Romance de Amor Petrouchka						
KS5381	KS5381A	Home sweet home Oh, susanna Wrispering hope Dreaming of home and mother Oh, my darling elementire Beautiful Dreamer Red river vally	32.768	1.5 (3.0)	0.1	200 (min)	Chip 16 DIP 20 DIP	For watch IC 16 DIP: serial selection 20 DIP: binary selection
KS5401	Electronic sound effect		125	3	0.5	100	Chip, 18 DIP	Speaker
KS5814	Sky-lark and circket sound		210	1.5	0.1	250	Chip, 14 DIP	Speaker

7. Calculator

Device	Function	A.P.O*	V_{DD} (V)	I_{DD}(μA)		Package	Remark
				Typ	Max		
KS6325	8 Digit Basic	Option	1.5	4.2	6	Chip 48 QFP	Clear key: ON/C, ON/CE, CE
KS6326	8 Digit Basic	Enable		4.2	6		Internal voltage limiter
KS6129	10 Digit Basic	Option		1.5	3		Clear key; ON/AC, ON/CCE, CE Low current type
†KS6429	10 Digit Basic			2	4	Chip 48 QFP	Punctuation comma function
KS6525	8 Digit Basic	Option	3.0	20	30	Chip 48 QFP	Touch time function
KS6225	8 Digit Basic	Option	1.5	4.2	6.0	Chip 48 QFP	Mirror type of KS6325
KS6027	10/12 Digit Desk Top	Disable	1.5	4.4	6.5	Chip	64 QFP available (KS6077)
†KS6078	Desk Top Calculator	Enable	1.5	4.4	6.5	Chip 64 QFP	Power: Solar, Battery
KS6042	10 Digit Scientific	Enable	3	20	35	Chip 48 QFP	56 kinds function
KS6033	20 Item Memory Data Bank	ADO* Option	3	20	35	Chip 60 QFP	Clock, telephone, calculator mode
†KS6034	20 Item Memory Data Bank	ADO* Option	3	20	35	Chip 60 QFP	Clock, telephone, calculator mode
†KS6035	50 Item Memory Data Bank	ADO Option	3	20	35	Chip 60 QFP	Clock, telephone, calculator mode

8. Miscellaneous

Device	Function	V_{DD} (V)	I_{DD} (μA)		Package	Remark
			Typ	Max		
KS5815	Clinical thermometer	1.5	—	100	Bare chip	°C/°F option
KS5116	6 Digit up/down counter	1.5	9	16	Bare chip	Internal RC oscillator

† New Product †† Under Development

VOICE SYNTHESIZER ICs

Features \ Device	KS5912XX	*KS5914XX	**KS5916	KS5917	KS5915	*KS5919	**KS5921
Function	Voice Synthesizer		Voice Synthesizer	Voice Recorder and Reproducer			Voice Recorder and Reproducer
Operating Voltage	5V	2.7V~5.5V	5V	5V	5V	5V	5V
Oscillation Frequency	640KHz (R.C. osc)	640KHz (R.C, X-tal, Resonator)	640KHz (X-tal osc.)	640KHz (R.C. osc)	640KHz (X-tal, Resonator)	640KHz (X-tal, Resonator)	640KHz (X-tal osc.)
Sampling Frequency	8, 16, 32KHz	11, 16, 22, 32KHz	11, 16, 22, 32KHz	8, 11, 16, 32KHz	8, 16, 22, 32KHz	11, 16, 22, 32KHz	11, 16, 22, 32KHz
Bit Rate	8, 16, 32Kbps	11, 16, 22, 32Kbps	11, 16, 22, 32Kbps	8, 11, 16, 32Kbps	8, 16, 22, 32Kbps	11, 16, 22, 32Kbps	11, 16, 22, 32Kbps
Control Mode	•CPU/Manual •Repeat Mode	•CPU/Manual •Repeat Mode	•CPU/Manual	•CPU/Manual •Auto Talking Back	•CPU/Manual	•CPU/Manual	•CPU/Manual
Data Memory	Internal ROM 64K bits	Internal ROM 256K bits	External ROM 32M bits	External DRAM 64K or 256K	External DRAM 256K or 1M	External DRAM 1M or 4M	External SRAM 256K or 1M
Speech Time	Max: 8 sec	Max: 24 sec	Max: 50.8 min	Max: 2 min	Max: 8 min	Max: 24 min	Max: 6.4 min
D/A Converter	10 bit DAC	10 bit DAC	10 bit DAC	10 bit DAC	10 bit DAC	10 bit DAC	10 bit DAC
PKG	16 DIP	20 DIP	60 QFP	48 QFP	60 QFP	60 QFP	80 QFP
Application	•Home Automation •Toy •Automobile •Advertising Board •Voice Clock		•Home Automation •Office Automation •Voice Dictionary	•Message Phone •Answering Machine •HA/FA System •Toy etc.			•Answering Machine •Voice Memory Card

* New Product
** Under Development

LCD Products

Function	Type	Package	Features	Application
40CH SEG/ COM Driver	KS0065	60 QFP, bare chip	—Interface with KS0066 (Controller LSI) —Selectable function to use common/segment drivers simultaneously	—Electronic measurement system —FAX, OA system, etc.
LCD Controller & Driver	KS0066	80 QFP, bare chip	—Interface with 4 bit or 8 bit MPU —Internal LCD driver •16 common controller •40 segment signal drivers —DD RAM for 80 CH. —Internal CG ROM.	—Electronic measurement system —FAX, OA system, etc.
80CH Segment Driver	KS0063	100 QFP, bare chip	—Interface with KS0066 (Controller LSI) —Only segment driver	—Electronic measurement system —FAX, OA system, etc.
80CH SEG/COM Driver	KS0083 KS0785	100 QFP, bare chip 100 TAB	—Supply voltage: 4.5 ~ 5.5V —LCD driving voltage: −24V (typ.) —COM/SEG drivers	—Electronic measurement system —FAX, OA system, etc. —LAP top computer —OA system etc.
68CH. Common Driver	KS0103	80 QFP, bare chip	—Power supply voltage : 4.5 ~ 5.5V —Display voltage: 8-28V —Applicable LCD duty: 1/68-1/256	—LAP Top computer, —Word Processor
80CH. Segment Driver	KS0104 KS0704	100 QFP, bare chip 100 TAB	—Power supply voltage: 5V ± 10% —Display voltage: 8-28V —Applicable LCD duty: 1/64-1/256	—LAP Top computer, —Word Processor
32CH Common Driver	KS0105	60 QFP	—Power supply voltage: 50 ± 10% —Display voltage: 0V ~ −5.5V —Applicable LCD duty: 1/8 ~ 1/64	—Game machine —Electronic dict
50CH Segment Driver	KS0106	80 QFP	—Power supply voltage: 5V ± 10% —Display voltage: 0V ~ −5.5V —Internal RAM (1,600 bits)	—Game machine —Electronic dict
LCD Controller & Driver	KS0068	100 QFP	—Interface with 4 bit or 8 bit MPU —Internal LCD driver 16 common and 60 segment —DD RAM for 80 character —Internal CG ROM	—Electronic measurement system —Fax, OA, HA system

1. PC Products

Function	Type	Package	Features	Application
Parallel Controller	KS82C411	40 DIP	—Printer driver —Data readable —CMOS process	PC/XT or PS/2 parallel port
Serial & Parallel Controller	KS82C452	68 PLCC	—2 Serial and 1 parallel port —RS-232C asynchronous type —High speed operation —CMOS process	PC/XT or PS/2 serial, parallel port

2. Teletext & FAX. Products

Functions	Type	Package	Features	Application
Digital Teletext Processor	TXT4000	48 DIP	—Prefix processor —DMA interface —Composite processor —Video synchronization —Interrupt control	Teletext system (NABTS)
64 Bit Thermal Head Driver	KS5064	Die form	—Built in output control circuit & 64 bit driver —High supply voltage: 28V (max.) —High output current: 30mA (max.) —High speed operation: 2MHz	FAXIMILE
64 Bit LED Printer Driver	KS5164	Die form	—Output control function & 64 bit driver —Output current: 50mA (max.) 5mA (typ.) —High speed operation: 8MHz (max.) 4MHz (typ.)	FAXIMILE
TPH Controller	KT3000	28 DIP	—Single operating voltage: 5V —Low power consumption —I/O compatible with CMOS & TTL —I/O protected from ESD & latch up	FAXIMILE

1. INTRODUCTION

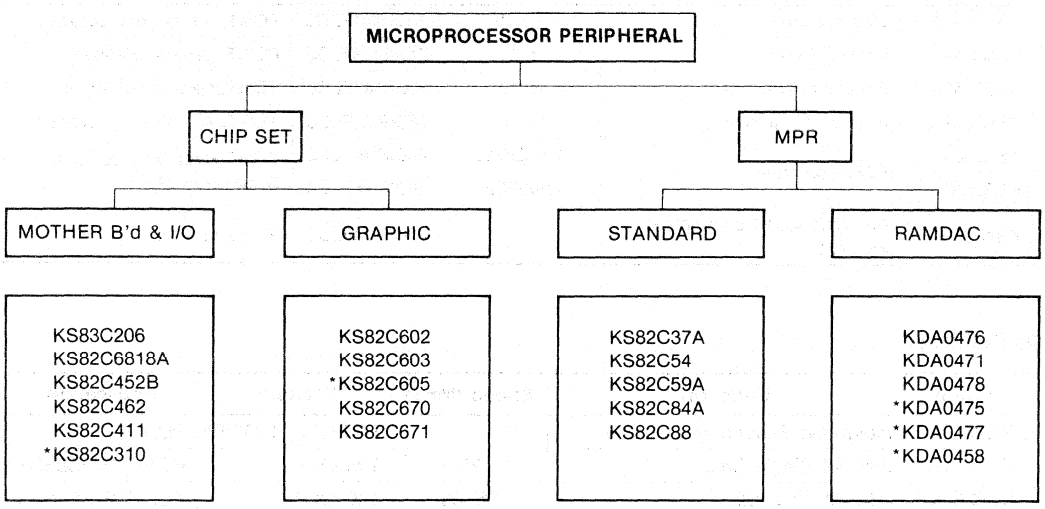

* : Under Development

2. PRODUCT GUIDE

1) Standard MPR

Device	Function	Speed (MHz)	Package	Application
KS82C37A	DMA Controller	5, 8, 10	40DIP/44PLCC	PC/XT, AT, general purpose
KS82C54	Interval Timer	8, 10	24DIP/28PLCC	PC/XT, general purpose
KS82C55A	Peripheral Interface	8, 10	40DIP/44PLCC	PC/XT, Facsimile, Printer
KS82C59A	Interrupt Controller	8, 10	28DIP/28PLCC	PC/XT, AT, general purpose
KS53C80	SCSI Controller	1.5MB/Sec	48DIP/44PLCC	PC/AT Hard Disk Controller SCSI protocol
KS5380C		3.0MB/Sec	40DIP/44PLCC	
KS82C50A	Asynchronous Communication Element		40DIP/44PLCC	PC Serial Port

2) CHIPSET

Device	Function	Speed (MHz)	Package	Application
KS83C206	Integrated Peripheral Controller		84 PLCC, 100QFP	PC/AT
*KS82C310	386 SX Single Chip	25	208 QFP	PC/AT PC/386SX
*KS82C381	386 SX Chip Set	25, 33	160 QFP	PC/AT PC/386SX
*KS82C881	486 DX Chip Set	50	160 QFP	PC/AT PC/486DX
*KS82C882	486 DX Chip Set	50	160 QFP	PC/AT PC/486DX
*KS82C411	Parallel I/O Interface		40 DIP	PC/XT, AT
*KS82C452	One Parallel, Dual Serial Controller		68 PLCC	PC/AT
*KS82C462	One Parallel, Dual Serial Controller		64 SDIP	PC/AT

* :Under Development

3) Graphic

(1) VGA

Device	Function	Speed (MHz)	Package	Application
KS82C602	Hangul VGA Controller	65	132 BQFP	PC
KS82C603	Super VGA Controller	65	132 BQFP	PC
*KS82C605	Mega VGA Controller	65	160 BQFP	PC

(2) Clock Gen.

Device	Function	Speed (MHz)	Package	Application
KS82C671	Single Clock Output	100	20 DIP	PC
KS82C670	Dual Clock Output	100	20 DIP	PC

(3) RAMDAC

Device	Function	Speed (MHz)	Package	Application
KDA0476	6 bit RAMDAC	50/66/80	28 DIP 32 PLCC 44 PLCC	PC
KDA0471	6 bit RAMDAC with Overlay	50/66/80	44 PLCC	
KDA0478	8 bit RAMDAC with Overlay	50/66/80/100/120	44 PLCC	
*KDA0475	6 bit Low Power RAMDAC	50/66/80	44 PLCC	Lap Top PC Note Book PC
*KDA0477	8 bit Low Power RAMDAC	50/66/80	44 PLCC	
*KDA0458	8 bit High Speed RAMDAC	80/110/125/175	84 PLCC	Work Station

* : Under Development

1. CMOS GATE ARRAY

	KG30000	KG40000	KG50000	KG60000
Design Rule (Drawn)	2.0μm (effective)	1.2μm (effective)	1.0μm	0.8μm
Process	CSP II (DLM, P-well)	CSP III (DLM, Twin-well)	CSP III-S (DLM, Twin-well)	CSP IV (DLM, Twin-well)
Usable Gates	<8,000	<30,000	<45,000	<100,000
Typ. Delay (2 input NAND, F/O = 2)	1.0ns	0.7ns	0.5ns	<0.4ns
Number of Pads	<160	<308	<454	<454
EWS Support	Mentor	Mentor, View Logic, Valid, Hilo	Mentor, View Logic	Mentor, Cadence View Logic
Availability	Now	Now	Now	Mar. '93
Cell Lib		DPRAM, SRAM, ROM	DPRAM, SRAM, ROM	DPRAM, SRAM, ROM
Max. Toggle Frequency (MHz)	70	150	200	250

2. CMOS STANDARD CELL

	STD20	STD15	STD50	STD60
Design Rule (Drawn)	2.0μm (effective)	1.5μm (effective)	1.0μm	0.8μm
Process	CSNCR I (DLM, N-well, Twin-tub)	CSNCR II (DLM, N-well, Twin-tub)	CSP III-S (DLM, Twin-well)	CSP IV (DLM, Twin-well)
Usable Gates	30,000	50,000	100,000	150,000
Typ. Delay (2 input NAND, F/O = 2)	1.1ns	0.7ns	0.5ns	0.4ns
EWS Support	Mentor	Mentor View Logic, Valid	Mentor View Logic	Mentor, Cadence View Logic
Availability	Now	Now	June, '92	Mar. '93
Max. Toggle Frequency (MHz)	70	150	200	250

3. GATE ARRAY FAMILIES

1) KG40000 SERIES

Description		KG4042A	KG4102A	KG4162A	KG4272A	KG4352A	KG4542A	KG4772A	KG4123A	KG4153A	KG4193A	KG4323A	KG4403A	KG4493A	KG4703A
Total Gates		441	1078	1666	2750	3475	5394	7733	12144	15548	19372	32325	39674	49569	69520
*Usable Gates		70% max. for logic with RAM, and ROM							50% max. for logic only						
Chip Size		2264 x 2288	2768 x 2804	3146 x 3114	3632 x 3632	3884 x 3942	4514 x 4562	5144 x 5210	6134 x 6142	6764 x 6828	7394 x 7448	9140 x 9206	9986 x 10034	10976 x 11068	12758 x 12824
Pad Counts	I/O	24	36	48	60	68	84	100	128	144	160	208	228	256	304
	Power	4	4	4	4	4	4	4	4	4	4	4	4	4	4
	Total	28	40	52	64	72	88	104	132	148	164	212	232	260	308
Core Array		49 x 9	77 x 14	98 x 17	125 x 22	139 x 25	174 x 31	209 x 37	264 x 46	299 x 52	334 x 58	431 x 75	478 x 83	533 x 93	632 x 110

* Usable gate counts are very depending on the applications.

2) KG50000 SERIES

Description		KG5142	KG5212	KG5322	KG5412	KG5702	KG5103	KG5173	KG5203	KG5273	KG5433	KG5543	KG5673	KG5863	KG5104
Total Gates		1455	2106	3212	4125	6996	10400	16400	20552	26688	43011	54509	67569	85956	103000
Estimated Usable Gates		800	1200	1800	2300	3500	5000	7800	9300	12000	17300	22000	26400	35000	41200
Estimated Chip Utility		55%	55%	55%	55%	50%	47%	47%	45%	45%	43%	43%	40%	40%	40%
Chip Size *Scribe line (170um)		2110 x 2098	2368 x 2354	2742 x 2694	2986 x 3002	3592 x 3682	4212 x 4280	5090 x 5128	5592 x 5640	6236 x 6322	7708 x 7768	8586 x 8618	9488 x 9470	10584 x 10576	11488 x 11512
Pad Counts	I/O	40	48	60	68	88	108	136	152	172	220	248	276	312	380
	Power	4	4	4	4	4	4	4	4	4	4	4	4	4	4
	Total	44	52	64	72	92	112	140	156	176	224	252	280	316	384
Core Array		97 x 15	117 x 18	146 x 22	165 x 25	212 x 33	260 x 40	328 x 50	367 x 36	417 x 64	531 x 81	590 x 91	660 x 101	754 x 114	818 x 138

4. STANDARD CELL LIBRARIES

1) STD15

Cell Description	Function Description
Primitive Cells (178)	Simple Logic : 68 Register & Counter : 7 Latch & Flip-Flop : 31 I/O Cell : 39 Decoder & MUX : 6 Special Function : 27
MSI Logic Cell	74xx Series : 66
Analog Cells (10)	Analog Switch Bandgap Voltage Reference , 8 bit D/A converter General Purpose Comparator ECL Input Interface General Purpose OP Amp Resistors Cap
Compiled Cell	Single/Dual Port RAM SRAM (High Speed) ROM
Super Cell	82xx Series (8237A, 8254A, 8259A) 2910, 2901 6845, 146818, 16C450

2) STD50

Cell Description	Function Description
Primitive Cells (398)	Simple Logic : 136 Register & Counter : 1 Latch & Flip-Flop : 72 I/O Cell : 159 Decoder & MUX : 12 Special Function : 28
MSI Logic Cell	74xx Series : 56
Analog Cells (6)	Analog Switch . 8 bit A/D converter Bandgap Voltage Reference , 8 bit D/A converter General Purpose Comparator General Purpose OP Amp Resistors Cap
Compiled Cell	Single/Dual Port RAM, Multiplier SRAM (High Speed) ROM
Super Cell	82xx Series (8237A, 8254A, 8259A) 2910, 2901 6845, 146818, 16C450

SAMSUNG MICROCONTROLLER HIERARCHY

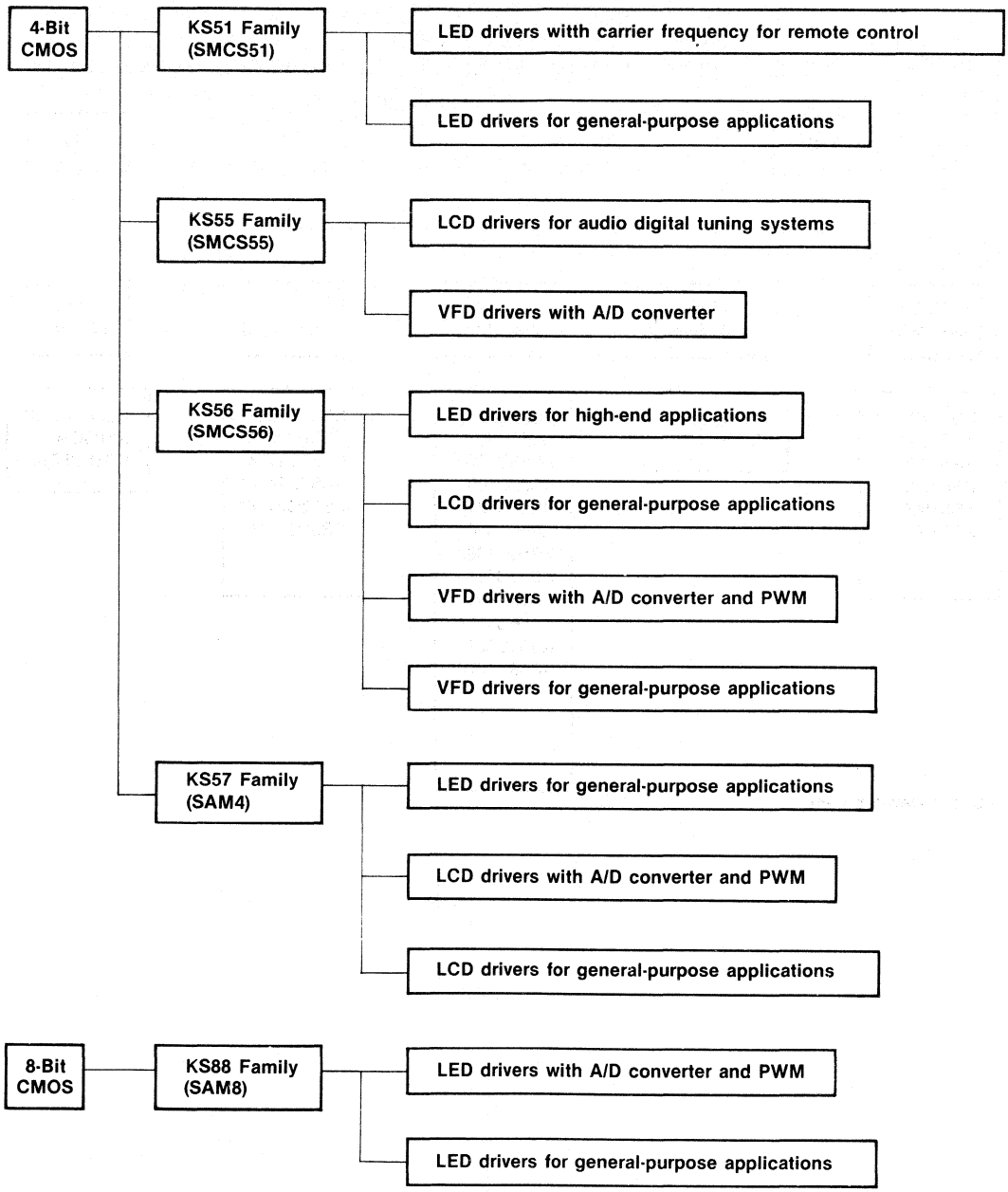

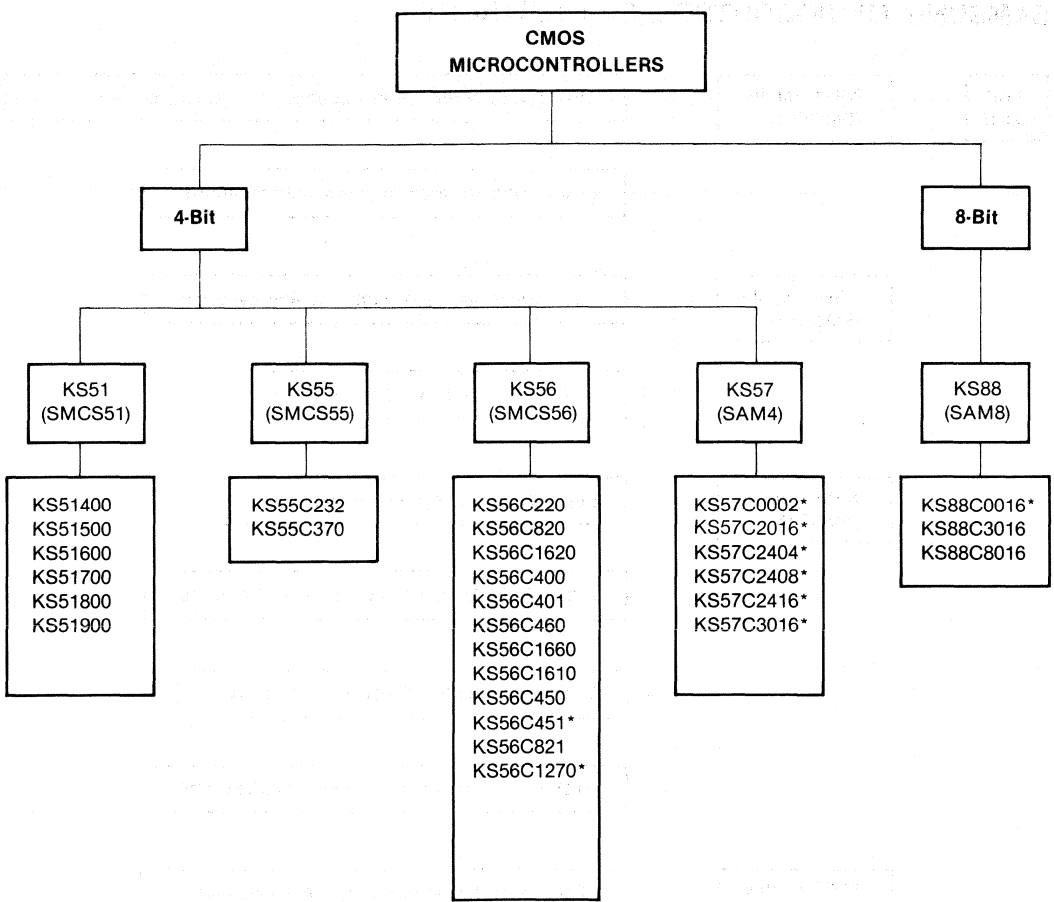

* Under Development

MICROCONTROLLER LINE-UP

		ROM (byte)	20	24	30	32	42	48	64	80	100
A/D + α	VFD	12K							*56C1270		
		6K				55C370					
	LCD	16K								*57C2416	
		8K								*57C2408	
		4K							55C232	*57C2404	
	LED	16K									*57C3016
General Purpose	VFD	16K							56C1610		
	LCD	16K								56C1620	*57C2016
		8K								56C820	56C821
		2K							56C220		
	LED	16K							88C0016 88C3016 56C1660	88C8016	
		4K		*56C451 56C450		56C401	56C450 *56C451		56C460 56C400		
		2K			*57C0002 51500		51400				
		1K		51800	51600						
		0.5K	51900 51700								

Number of Pins

* Under Development

MICROCONTROLLER DEVELOPMENT SYSTEM

Device	MDS		Piggyback	ROMless Type	EEPROM Type
	EM5X	SMDS			
KS51400	EM5X-1400	SMDS-CU-1400	PB51400	KS51499	
KS51500	EM5X-1500	SMDS-CU-1500	PB51500	KS51499	
KS51600	EM5X-1600	SMDS-CU-1600	PB51600	KS51499	
KS51700	EM5X-1700	SMDS-CU-1700	PB51700	KS51499	
KS51800	EM5X-1800	SMDS-CU-1800		KS51499	
KS51900	EM5X-1900	SMDS-CU-1900		KS51499	
KS55C232	EM5X-5232	SMDS-CU-5232	PC55C232	KS55E032	
KS55C370	EM5X-5370	SMDS-CU-5370	PB55C370	KS55E070	
KS56C220		SMDS-CU-6220	PC556C220	KS56E020	
KS56C820		SMDS-CU-6820	PC56C820	KS56E020	KS56P820*
KS56C1620		SMDS-CU-61620	PC56C1620	KS56E020	
KS56C400		SMDS-CU-6400	PC56C400	KS56E060	
KS56C401		SMDS-CU-6401*	PC56C401*	KS56E001*	
KS56C460		SMDS-CU-6460	PC56C460	KS56E060	
KS56C1660		SMDS-CU-61660	PC56C1660	KS56E060	
KS56C1610		SMDS-CU-61610	PC56C1610	KS56E010	
KS56C450		SMDS-CU-6450	PC56C450	KS56E050	
KS56C451*		SMDS-CU-6451	PC56C451*	KS56E051*	
KS56C821		SMDS-CU-6821	PC56C821*	KS56E021	
KS56C1270*		SMDS-CU-61270*	PC56C1270*	KS56E070*	
KS57C0002*		SMDS-CU-70002*	PC57C0002*	KS57E0000*	
KS57C2016*		SMDS-CU-72016*	PC57C2016*	KS57E2000*	
KS57C2404*		SMDS-CU-72404*	PC57C2404*	KS57E2400*	
KS57C2408*		SMDS-CU-72408*	PC57C2408*	KS57E2400*	
KS57C2416*		SMDS-CU-72416*	PC57C2416*	KS57E2400*	KS57P2416*
KS57C3016*		SMDS-CU-73016*	PC57C3016*	KS57E3000*	
KS88C0016*		SMDS-CU-80016*		KS88E0000*	
KS88C3016		SMDS-CU-83016		KS88E0016	
KS88C8016		SMDS-CU-88016		KS88E0016	

* Under Development

KS51 (SMCS51) Family

FEATURES

- Simple architecture
- Programmable carrier frequencies for remote control
- Output port current for LED direct drive: $I_{OH} = 25mA$ (typical) at $V_{OH} = 2.4V$
- User-writable PLA output port
- Built-in RC and/or Crystal/Ceramic oscillation circuit
- Power-down Mode
- 40 instructions

APPLICATIONS

- Remote control transmitter
- Fan controller
- Humidifier
- Toys

CHARACTERISTICS

Device	ROM (byte)	RAM (nibble)	Supply Voltage	Max. Osc. (MHz)	I/O Port		Osc. Source	Remote carrier Frequency	LED	Package	Piggyback
					In	Out					
KS51400	2K	128	5V	3	8	24	RC Crystal		●	40SDIP	PB51400
KS51500	2K	128	5V	3	4	19	RC Crystal		●	30SDIP	PB51500
KS51600	1K	64	3/5V	3	8	16	RC Crystal		●	30SDIP	PB51600
KS51700	0.5K	32	3/5V	3	5 (4)	9 (10)	RC Crystal		●	20DIP 20SOP	PB51700
KS51800	1K	32	3V	0.7	8	11	Crystal	Fosc/8, Fosc/12, No carrier	●	24DIP-SK 24SOP	
KS51900	0.5K	32	3V	0.7	5	9	Crystal	Fosc/8, Fosc/12, No carrier	●	20DIP 20SOP	

Note: Byte = 8 bits, nibble = 4 bits.

KS55 (SMCS55) Family

FEATURES

- 16-bit ROM architecture
- VFD or LCD direct drive
- Built-in RC and/or Crystal/Ceramic oscillation circuit
- Power-down Mode
- 70 Instructions

APPLICATIONS

- Car Stereo with Digital Tuning System
- Microwave Ovens
- Washing Machines
- Other LCD and VFD Applications

CHARACTERISTICS

Device	ROM (byte)	RAM (nibble)	Supply Voltage	Max. Osc. (MHz)	I/O Port			Ext. Inte-rrupt	Osc. Source	SIO	Timer/ Counter	PLL	IF counter	A/D	PWM	Display			Package	Piggyback
					In	Out	I/O									LED	LCD	VFD		
KS55C232	4K	256	5V	6.0	4	3	12	1	Crystal	8bit 1ch	125 & 5 ms F/F	150 MHz	16bit 1ch	6bit 1ch	6bit 1ch	●	28seg 2com		64QFP	PC55C232
KS55C370	6K	256	5V	2	0	20	12	1	Crystal	8bit 1ch	8bit 1ch			8bit 4ch		●		8seg 12dig	40DIP	PB55C370

Note: Byte = 8 bits, nibble = 4 bits.
The output port number includes VFD or LCD drive pins.

KS56 (SMCS56) Family

FEATURES

- Four-register-bank architecture
- LCD or VFD direct drive
- Built-in RC and/or Crystal/Ceramic oscillation circuit
- Two-clock oscillation for reduced power consumption
- Power-down mode
- Selectable instruction cycle time: 0.95, 1.91, 15.3μs @4.19MHz
- 135 instructions

APPLICATIONS

- VCR
- CD Players
- Cameras
- Telephone
- Stereo systems
- LCD Remote Controller
- Medical Instruments
- Other LED, LCD and VFD Applications

CHARACTERISTICS

Device	ROM (byte)	RAM (nibble)	Supply Voltage	Max. Osc. (MHz)	I/O Port			Ext. Interrupt	Osc. Source	Clock No.	SIO	Timer/ Counter	Watch Timer	A/D	PWM	DTMF	Display			Package	Piggback
					In	Out	I/O										LED	LCD	VFD		
KS56C400	4K	256	5V	4.5	6		29	3	Crystal	1	8bit 1ch	8bit 2ch					●			42SDIP	PC56C400
KS56C460	4K	512	5V	4.5	8		44	3	Crystal	1	8bit 1ch	8bit 2ch		4bit 4ch			●			64SDIP (64QFP)	PC56C460
KS56C1660	16K	512	5V	4.5	8		44	3	Crystal	1	8bit 1ch	8bit 2ch		4bit 4ch			●			64SDIP (64QFP)	PC56C1660
KS56C220	2K	288	3/5V	4.5	4	8	12	1	RC Crystal	2		8bit 1ch	●				●	32seg 4com		64QFP	PC56C220
KS56C820	8K	512	3/5V	4.5	8	8	24	3	RC Crystal	2	8bit 1ch	8bit 1ch	●				●	32seg 4com		80QFP	PC56C820
KS56C1620	16K	512	3/5V	4.5	8	8	24	3	RC Crystal	2	8bit 1ch	8bit 1ch	●				●	32seg 4com		80QFP	PC56C1620
KS56C821	8K	5120	3/5V	1	4	16	16	3	RC Crystal	2		8bit 1ch	●				●	60seg 9com		100QFP	PC56C821*
KS56C1610	16K	512	5V	4.5	8	4	20	3	Crystal	2	8bit 1ch	8bit 1ch	●		14bit 1ch		●		10seg 16dig	64SDIP	PC56C1610
KS56C450P KS56C450N	4K	736	3/5V	3.58	4	0	31	2	Crystal	1		8bit 2ch				●	●			42SDIP (28DIP)	PC56C450
*KS56C1270	12K	320	5V	4.5	9	17	38	2	RC Crystal	1	8bit 1ch	8bit 2ch		8bit 8ch			●		12seg 16dig	64SDIP	PC56C1270*
KS56C401	4K	512	3/5V	4.5	1	1	23	2	Crystal	1	8bit 1ch	8bit 2ch	●				●			32SOP	PC56C401*
*KS56C451P *KS56C451N	4K	736	3/5V	3.58	4	0	31	4	Crystal	1		8bit 2ch				●	●			42SDIP (28DIP)	PC56C451*

Note: Byte = 8 bits, nibble = 4 bits
Some pins of I/O port can be used for LCD or VFD drive pins.
* Under development

KS57 (SAM4) Family

FEATURES

- 4-bit arrangeable microcontrollers
- Compatible with KS56 Family
- Wide supply voltage range from 2V to 6V
- Various user-arrangeable modules:
  - 5MHz clock frequency (Maximum)
  - ROM (up to 1K × 4 bits)
  - RAM (up to 1K × 4 bits)
  - Parallel I/O and/or serial interface buffer
  - Timers and/or counters
  - DTMF generator and/or pulse width modulation
  - A/D converter and/or comparator
  - Low Voltage detector

APPLICATIONS

- VCR
- CD Players
- Cameras
- Telephone
- Stereo systems
- LCD Remote Controller
- Medical Instruments
- Other LED, LCD and VFD Applications

CHARACTERISTICS

Device	ROM (byte)	RAM (nibble)	Supply Voltage	Max. Osc. (MHz)	I/O Port			Ext. Inte-rrupt	Osc. Source	Clock No.	SIO	Timer/ Counter	Watch Timer	PLL	A/D	PWM	Display		Package	Piggyback
					In	Out	I/O										LED	LCD		
*KS57C0002	2K	256	3/5V	4.5	6	0	18	2	RC Crystal	1	8bit 1ch	8bit 1ch	●		CMP 7ch		●		30SDIP	PC57C0002*
*KS57C2016	16K	512	3/5V	4.5	4	12	40	3	RC Crystal	2	8bit 1ch	8bit-1ch 16bit-1ch	●			16bit 1ch	●	40seg 4com	100QFP	PC57C2016*
*KS57C2404	4K	512	3/5V	5	6		26	3	RC Crystal	2	8bit 1ch	8bit-1ch 16bit-1ch	●		8bit 6ch		●	20seg 4com	80QFP	PC57C2404*
*KS57C2408	8K	512	3/5V	5	10	12	28	3	RC Crystal	2	8bit 1ch	8bit-1ch 16bit-1ch	●		8bit 6ch		●	20seg 4com	80QFP	PC57C2408*
*KS57C2416	16K	512	3/5V	5	10	12	28	3	RC Crystal	2	8bit 1ch	8bit-1ch 16bit-1ch	●		8bit 6ch		●	32seg 4com	80QFP	PC57C2416*

Note: Byte = 8 bits, nibble = 4 bits.
The number of I/O ports does not include LCD drive pins.
* Under development

KS88 (SAM8) Family

FEATURES

- 8-bit arrangeable microcontrollers
- Output port current for LED direct drive:
  $I_{OH} = 25mA$ (typical) at $V_{OH} = 2.4V$
- Various user arrangeable modules:
  - 20MHz clock frequency (Maximum)
  - ROM (up to 64 KBytes)
  - RAM (up to internal 1 KBytes, external 64 KBytes)
  - Parallel I/O, SIO, UART, I^2C
  - Timers and/or counters
  - Pulse width modulation and/or on screen display
  - Power saving timer and/or comparator
  - A/D converter and/or VS separator
  - HS generator

APPLICATIONS

- CTV
- VTR
- Cameras
- Home appliances
- Industrial Instruments

CHARACTERISTICS

Device	ROM (byte)	RAM (Byte)	Supply Voltage	Max. Osc. (MHz)	I/O Port			Ext. Inte-rrupt	Osc. Source	SIO	Timer/ Counter	Watch Timer	A/D	PWM	OSD	LED	Package
					In	Out	I/O										
*KS88C0016	16K	128	5V	20			32	16	Crystal	8bit 1ch	16bit 2ch					●	64SDIP
KS88C3016	16K	343	5V	20			31	10	Crystal	8bit 1ch	8bit 2ch	●	4bit 1ch	14bit-1ch 8bit-12ch	●	●	64SDIP
KS88C8016	16K	336	5V	20			40	16	Crystal	8bit 1ch	8bit-2ch 16bit-2ch	●	8bit 8ch	14bit 2ch		●	80QFP

Note: Byte = 8 bits, nibble = 4 bits.
* Under development

1. INTRODUCTION

1.1 Dynamic RAM

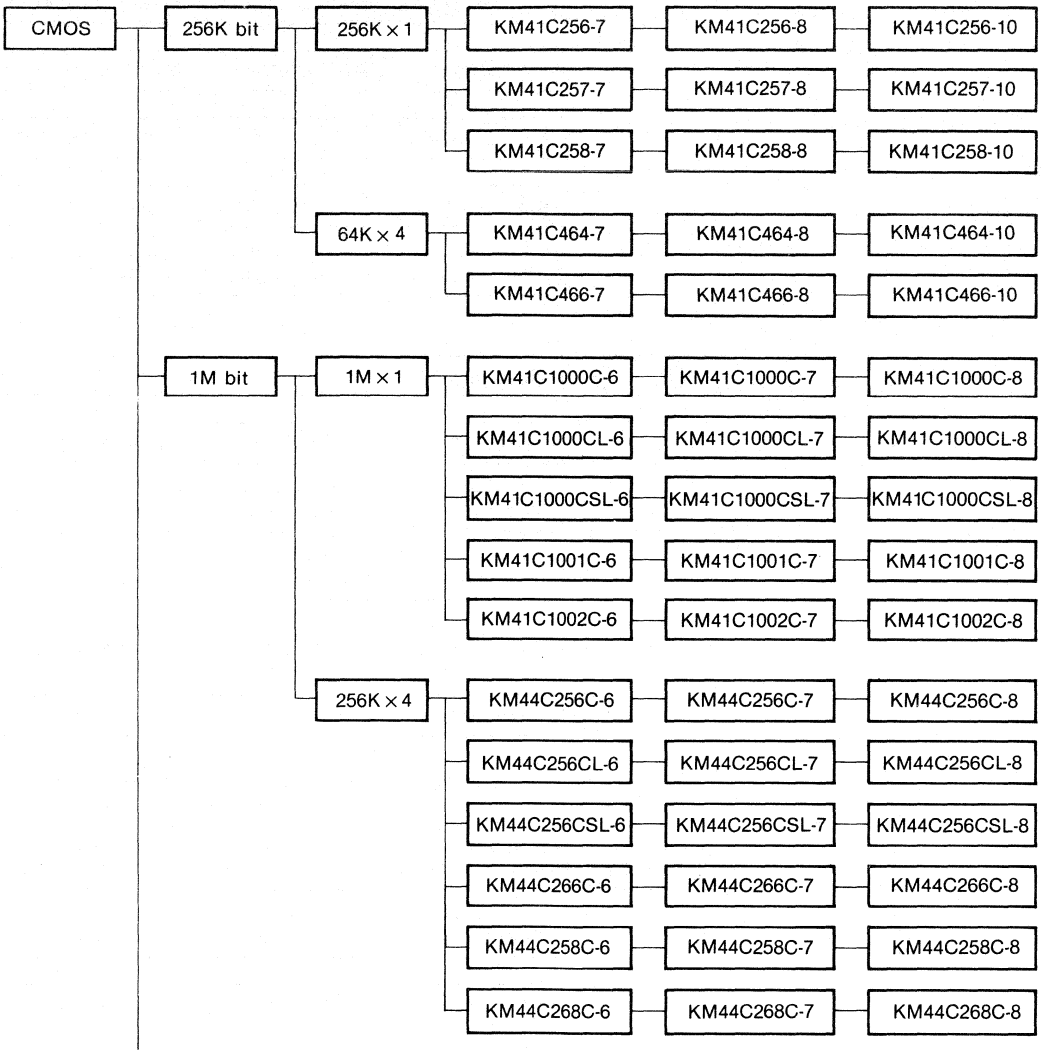

1

- 4M bit
  - 4M × 1
    - KM41C4000A-7 — KM41C4000A-8 — KM41C4000A-10
    - KM41C4000AL-7 — KM41C4000AL-8 — KM41C4000AL-10
    - KM41C4000ASL-7 — KM41C4000ASL-8 — KM41C4000ASL-10
    - KM41C4001A-7 — KM41C4001A-8 — KM41C4001A-10
    - KM41C4002A-7 — KM41C4002A-8 — KM41C4002A-10
    - * KM41C4000B-6 — * KM41C4000B-7 — * KM41C4000B-8
  - 1M × 4
    - KM44C1000A-7 — KM44C1000A-8 — KM44C1000A-10
    - KM44C1000AL-7 — KM44C1000AL-8 — KM44C1000AL-10
    - KM44C1000ASL-7 — KM44C1000ASL-8 — KM44C1000ASL-10
    - KM44C1002A-7 — KM44C1002A-8 — KM44C1002A-10
    - KM44C1010A-7 — KM44C1010A-8 — KM44C1010A-10
    - KM44C1012A-7 — KM44C1012A-8 — KM44C1012A-10
    - * KM44C1000B-6 — * KM44C1000B-7 — * KM44C1000B-8
  - 256K × 16
    - KM416C256-7 — KM416C256-8 — KM416C256-10
    - KM416C256L-7 — KM416C256L-8 — KM416C256L-10
    - KM416C256SL-7 — KM416C256SL-8 — KM416C256SL-10
    - KM416C256LL-7 — KM416C256LL-8 — KM416C256LL-10

- CMOS
  - 4M bit
    - 256K × 18
      - KM418C256-7 — KM418C256-8 — KM418C256-10
      - KM418C256L-7 — KM418C256L-8 — KM418C256L-10
      - KM418C256SL-7 — KM418C256SL-8 — KM418C256SL-10
      - KM418C256LL-7 — KM418C256LL-8 — KM418C256LL-10
    - 512K × 8
      - KM48C512-7 — KM48C512-8 — KM48C512-10
      - KM48C512L-7 — KM48C512L-8 — KM48C512L-10
      - KM48C512SL-7 — KM48C512SL-8 — KM48C512SL-10
      - KM48C512LL-7 — KM48C512LL-8 — KM48C512LL-10
    - 512K × 9
      - KM49C512-7 — KM49C512-8 — KM49C512-10
      - KM49C512L-7 — KM49C512L-8 — KM49C512L-10
      - KM49C512SL-7 — KM49C512SL-8 — KM49C512SL-10
      - KM49C512LL-7 — KM49C512LL-8 — KM49C512LL-10
  - 16M bit
    - 16M × 1
      - KM41C16000-6 — KM41C16000-7 — KM41C16000-8
      - KM41C16000L-6 — KM41C16000L-7 — KM41C16000L-8
      - KM41C16100-6 — KM41C16100-7 — KM41C16100-8
      - KM41C16100L-6 — KM41C16100L-7 — KM41C16100L-8
    - 4M × 4
      - KM44C4000-6 — KM44C4000-7 — KM44C4000-8
      - KM44C4000L-6 — KM44C4000L-7 — KM44C4000L-8
      - KM44C4100-6 — KM44C4100-7 — KM44C4100-8
      - KM44C41000L-6 — KM44C41000L-7 — KM44C41000L-8

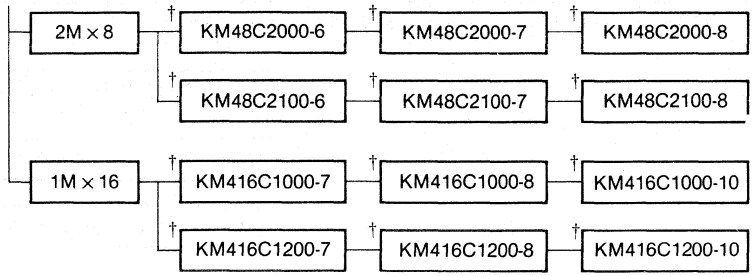

*: New Product
†: Preliminary Product
††: Under Development

1.2 Dynamic RAM Module

CMOS	256K × 8 (2-chips)	KMM58256CN-6	KMM58256CN-7	KMM58256CN-8
	256K × 9 (3-chips)	KMM59256CN-7	KMM59256CN-8	
	1M × 8	KMM581000C-6	KMM581000C-7	KMM581000C-8
	1M × 9	KMM591000C-6	KMM591000C-7	KMM591000C-8
	256K × 36	KMM536256C/CG-7	KMM536256C/CG-8	
	512K × 32	* KMM532512CV/CVG-6	* KMM532512CV/CVG-7	* KMM532512CV/CVG-8
	512K × 36	KMM536512C/CG-7	KMM536512C/CG-8	
	512K × 40	KMM540512C/CG/CM-6	KMM540512C/CG/CM-7	KMM540512C/CG/CM-8
	1M × 8 (2-chips)	KMM581000AN-7	KMM581000AN-8	KMM581000AN-10
		KMM581020AN-7	KMM581020AN-8	KMM581020AN-10
		* KMM581000BN-6	* KMM581000BN-7	* KMM581000BN-8
	1M × 9 (3-chips)	KMM591000AN-7	KMM591000AN-8	KMM591000AN-10
		KMM591020AN-7	KMM591020AN-8	KMM591020AN-10
		* KMM591000BN-6	* KMM591000BN-7	* KMM591000BN-8
	4M × 8	KMM584000A-7	KMM584000A-8	KMM584000A-10
		KMM584020A-7	KMM584020A-8	KMM584020A-10
		* KMM584000B-6	* KMM584000B-7	* KMM594000B-8

1

- CMOS
  - 4M × 9
    - KMM594000A-7 — KMM594000A-8 — KMM594000A-10
    - KMM594020A-7 — KMM594020A-8 — KMM594020A-10
    - * KMM594000B-6 — * KMM594000B-7 — * KMM594000B-8
  - 1M × 32
    - KMM5321000AV/AVG-7 — KMM5321000AV/AVG-8 — KMM5321000AV/AVG-10
    - * KMM5321000BV/BVG-6 — * KMM5321000BV/BVG-7 — * KMM5321000BV/BVG-8
  - 1M × 36
    - KMM5361000A/AG-7 — KMM5361000A/AG-8 — KMM5361000A/AG-10
    - * KMM5361000A1/A1G-7 — * KMM5361000A1/A1G-8 — * KMM5361000A1/A1G-10
    - * KMM5361000B/BG-6 — * KMM5361000B/BG-7 — * KMM5361000B/BG-8
    - * KMM5361000B1/B1G-6 — * KMM5361000B1/B1G-7 — * KMM5361000B1/B1G-8
  - 2M × 32
    - KMM5322000AV/AVG-7 — KMM5322000AV/AVG-8 — KMM5322000AV/AVG-10
    - * KMM5322000BV/BVG-6 — * KMM5322000BV/BVG-7 — * KMM5322000BV/BVG-8
  - 2M × 36
    - KMM5362000A/AG-7 — KMM5362000A/AG-8 — KMM5362000A/AG-10
    - * KMM5362000A1/A1G-7 — * KMM5362000A1/A1G-8 — * KMM5362000A1/A1G-10
    - * KMM5362000B/BG-6 — * KMM5362000B/BG-7 — * KMM5362000B/BG-10
    - * KMM5362000B1/B1G-6 — * KMM5362000B1/B1G-7 — * KMM5362000B1/B1G-10
  - 1M × 40
    - KMM5401000A/AG-7 — KMM5401000A/AG-8 — KMM5401000A/AG-10
    - * KMM5401000B/BG-6 — * KMM5401000B/BG-7 — * KMM5401000B/BG-8
  - 2M × 40
    - KMM5402000A/AG-7 — KMM5402000A/AG-8 — KMM5402000A/AG-10
    - * KMM5402000B/BG-6 — * KMM5402000B/BG-7 — * KMM5402000B/BG-8

CMOS	256K × 36 (2-chips)	KMM536256W/WG-7	KMM536256W/WG-8	KMM536256W/WG-10
	512K × 32 (4-chips)	KMM532512W3/W3G-7	KMM532512W3/W3G-8	KMM532512W3/W3G-10
	512K × 36 (4-chips)	KMM536512W3/W3G-7	KMM536512W3/W3G-8	KMM536512W3/W3G-10
	4M × 8	KMM584100N-6	KMM584100N-7	KMM584100N-8
	4M × 9 (3-chips)	KMM594100N-6	KMM594100N-7	KMM594100N-8
	16M × 8	KMM5816000/T-6	KMM5816000/T-7	KMM5816000/T-8
		KMM5816100/T-6	KMM5816100/T-7	KMM5816100/T-8
	16M × 9	KMM5916000/T-6	KMM5916000/T-7	KMM5916000/T-8
		KMM5916100/T-6	KMM5916100/T-7	KMM5916100/T-8
	4M × 32	KMM5324100V/VG/VP-6	KMM5324100V/VG/VP-7	KMM5324100V/VG/VP-8
	4M × 36	KMM5364100/G-6	KMM5364100/G-7	KMM5364100/G-8
		KMM5364000H/HG-6	KMM5364000H/HG-7	KMM5364000H/HG-8
		KMM5364100H/HG-6	KMM5364100H/HG-7	KMM5364100H/HG-8
	8M × 32	KMM5328100V/VG/VP-6	KMM5328100V/VG/VP-7	KMM5328100V/VG/VP-8
	8M × 36	KMM5368100/G-6	KMM5368100/G-7	KMM5368100/G-8
		KMM5368000H/HG-6	KMM5368000H/HG-7	KMM5368000H/HG-8
		KMM5368100H/HG-6	KMM5368100H/HG-7	KMM5368100H/HG-8
	4M × 40	KMM5404000/G-6	KMM5404000/G-7	KMM5404000/G-8
		KMM5404100/G-6	KMM5404100/G-7	KMM5404100/G-8

1

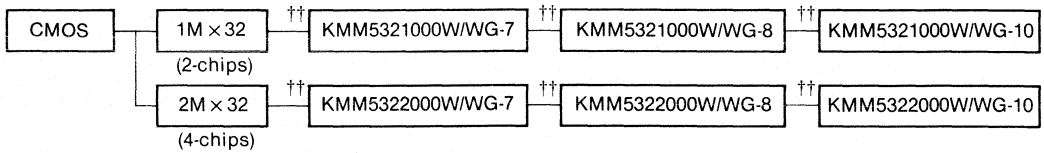

* New Product
†† Under Development

1.3 Video RAM

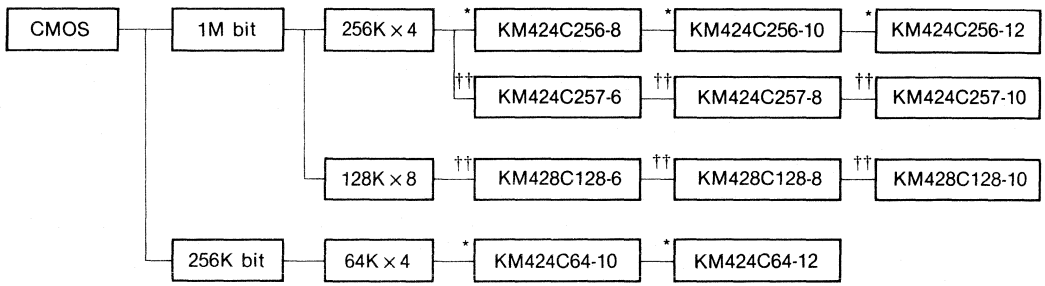

*: New Product
†: Preliminary Product
††: Under Development

1.4 Static RAM

Low Power SRAMs

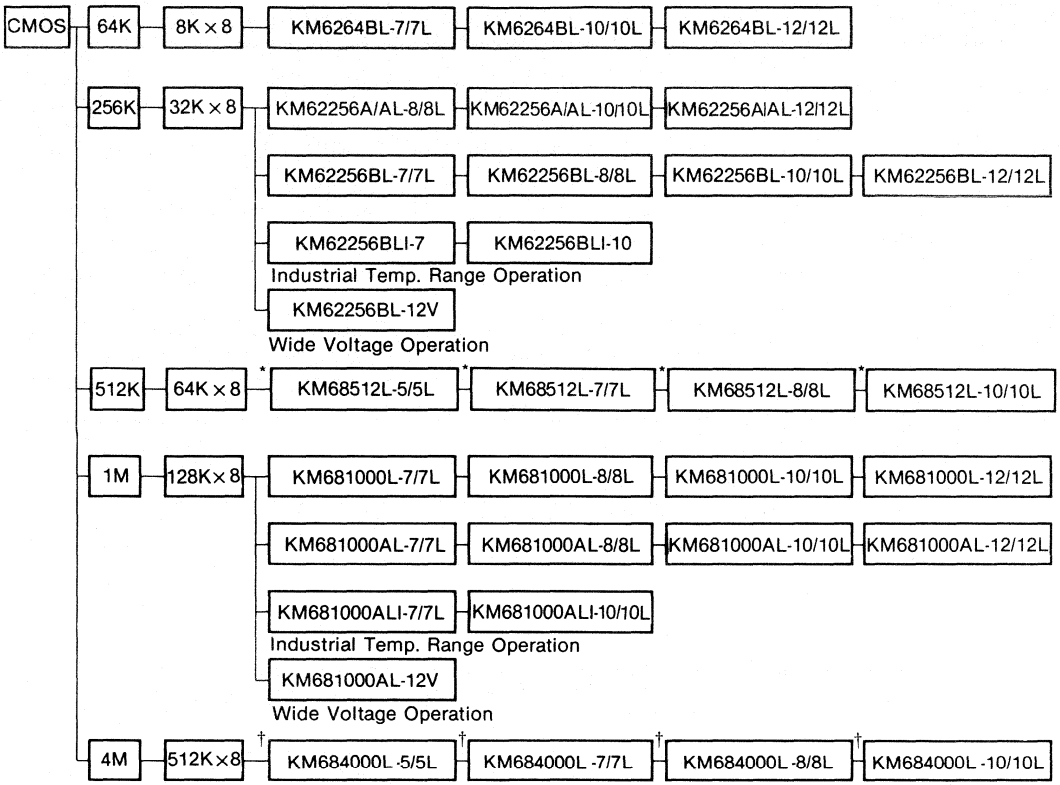

Pseudo SRAM Product Tree

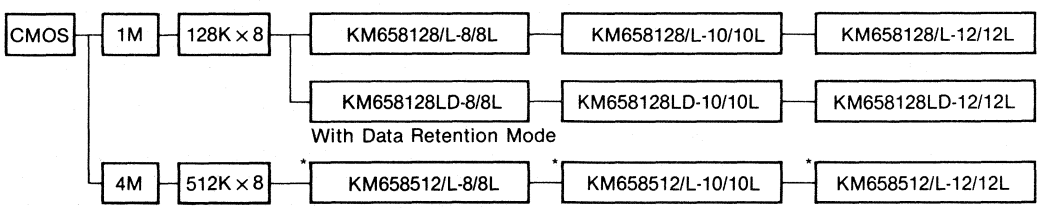

* New Product
† Preliminary Product
†† Under Development

High Speed SRAM

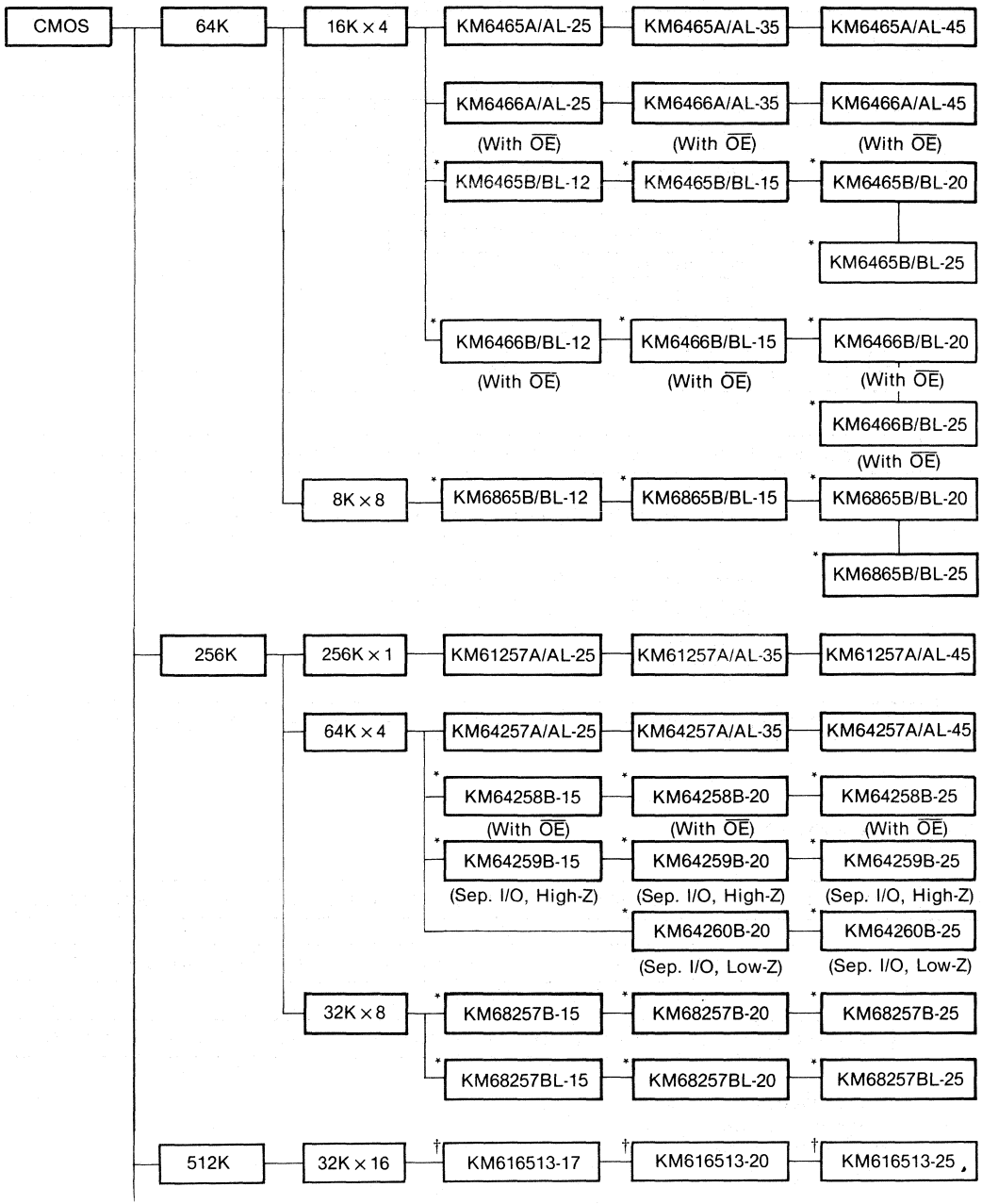

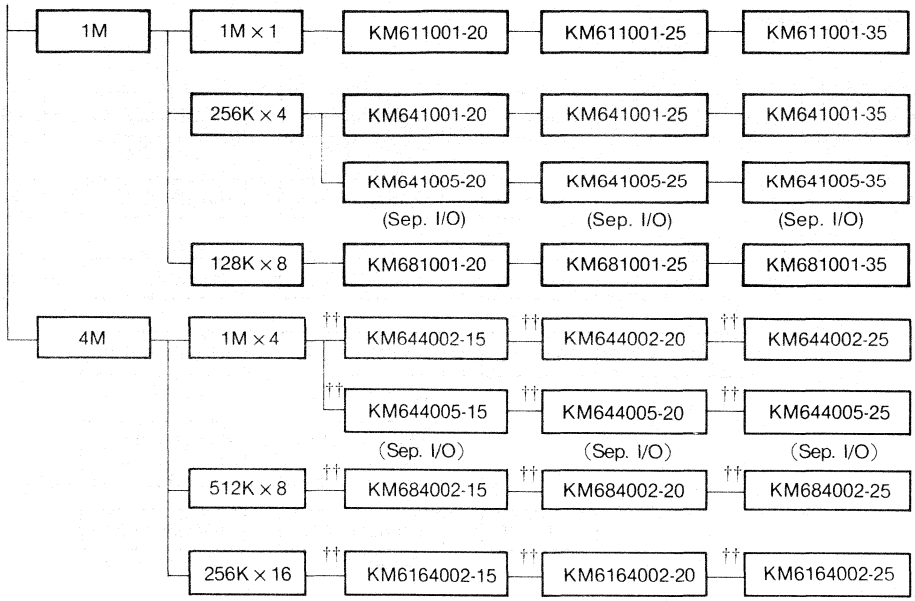
1M
1M × 1
KM611001-20
KM611001-25
KM611001-35
256K × 4
KM641001-20
KM641001-25
KM641001-35
KM641005-20
KM641005-25
KM641005-35
(Sep. I/O)
(Sep. I/O)
(Sep. I/O)
128K × 8
KM681001-20
KM681001-25
KM681001-35
4M
1M × 4
KM644002-15
KM644002-20
KM644002-25
KM644005-15
KM644005-20
KM644005-25
(Sep. I/O)
(Sep. I/O)
(Sep. I/O)
512K × 8
KM684002-15
KM684002-20
KM684002-25
256K × 16
KM6164002-15
KM6164002-20
KM6164002-25

1

*** BiCMOS SRAM**

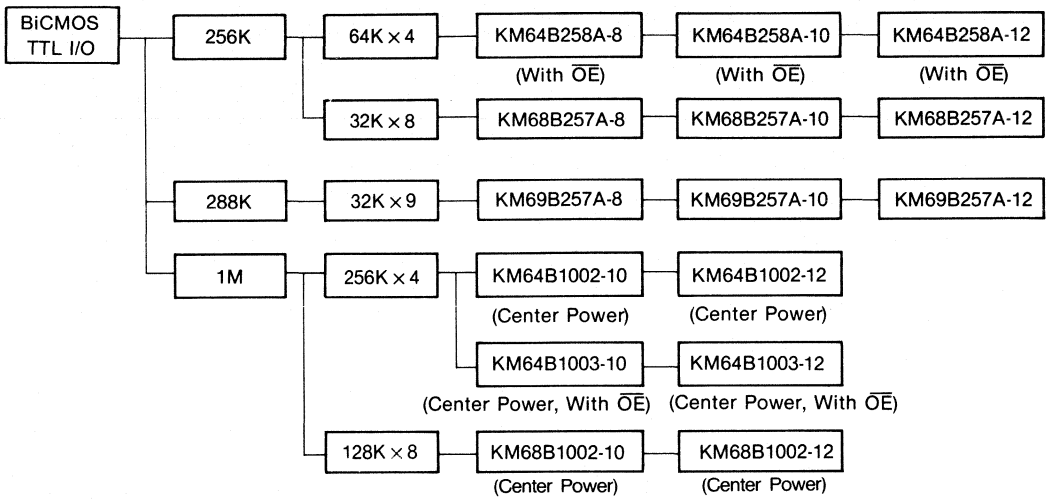

Specialty SRAM

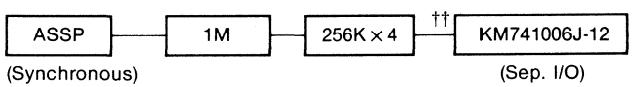

* New Product
† Preliminary Product
†† Under Development

1.5 Serial EEPROM

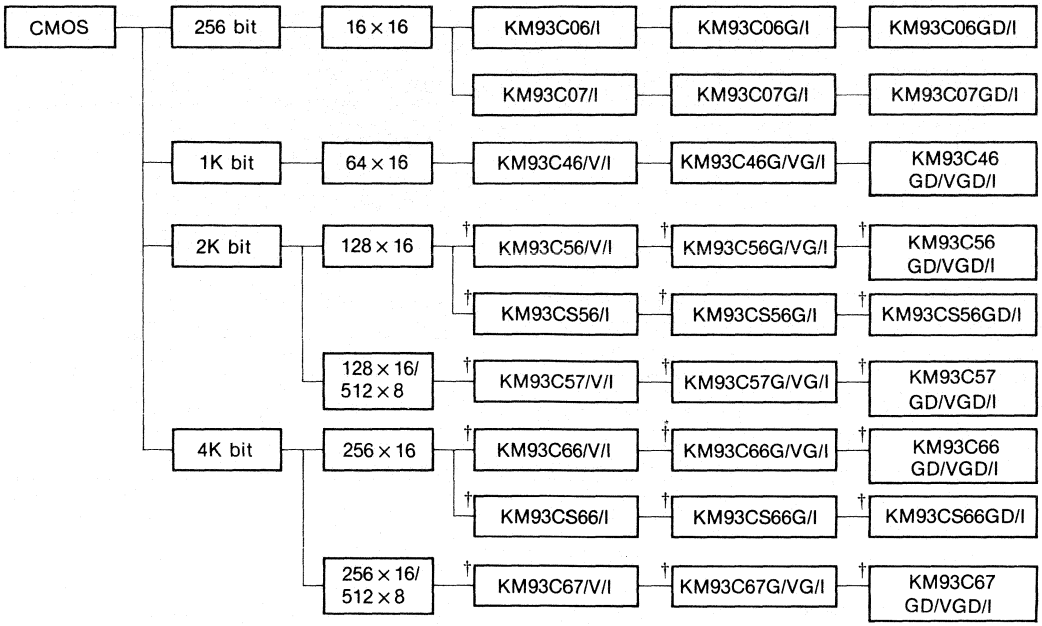

Parallel EEPROM

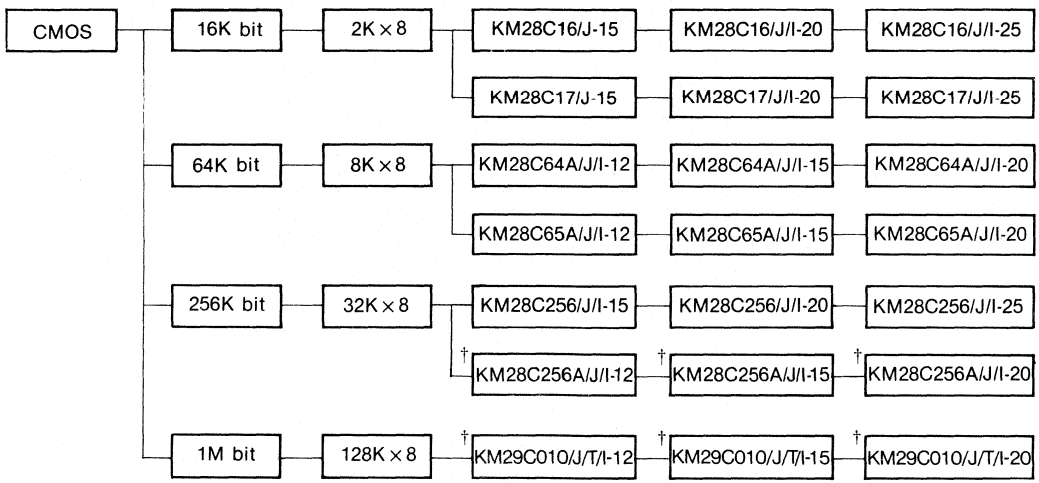

* New Product † Preliminary Product

1.6 MASKROM- I (Low Density)

CMOS	256K bit	32K × 8	KM23C256(G)-12	KM23C256(G)-15	KM23C256(G)-20
	512K bit	64K × 8	KM23C512(G)-12	KM23C512(G)-15	KM23C512(G)-20
	1M bit	128K × 8	KM23C1000-12	KM23C1000-15	KM23C1000-20
			KM23C1001-12	KM23C1001-15	KM23C1001-20
			KM23C1010(G)-12	KM23C1010(G)-15	KM23C1010(G)-20
			KM23C1010J-12	KM23C1010J-15	KM23C1010J-20
			KM23C1011(G)-12	KM23C1011(G)-15	KM23C1011(G)-20
	2M bit	256K × 8	KM23C2000(G)-15	KM23C2000(G)-20	KM23C2000(G)-25
			KM23C2000H(G)-10	KM23C2000H(G)-12	KM23C2000H(G)-15
			KM23C2001-15	KM23C2001-20	KM23C2001-25
			† KM23C2001H-10	† KM23C2001H-12	† KM23C2001H-15
		256K × 8/ 128K × 16	KM23C2100(FP)-15	KM23C2100(FP)-20	KM23C2100(FP)-25
			† KM23C2100H(FP)-10	† KM23C2100H(FP)-12	† KM23C2100H(FP)-15
	4M bit	512K × 8	KM23C4000A(G)-15	KM23C4000A(G)-20	KM23C4000A(G)-25
			KM23C4000B(G)-12	KM23C4000B(G)-15	KM23C4000B(G)-20
			KM23C4000H(G)-10	KM23C4000H(G)-12	KM23C4000H(G)-15
			KM23C4001A(G)-15	KM23C4001A(G)-20	KM23C4001A(G)-25
			KM23C4001B(G)-12	KM23C4001B(G)-15	KM23C4001B(G)-20
			KM23C4001H(G)-10	KM23C4001H(G)-12	KM23C4001H(G)-15
		512K × 8/ 256K × 16	KM23C4100BG-12	KM23C4100BG-15	KM23C4100BG-20
			KM23C4100A(FP)-15	KM23C4100A(FP)-20	KM23C4100A(FP)-25
			KM23C4100B(FP)-12	KM23C4100B(FP)-15	KM23C4100B(FP)-20
			KM23C4100H(FP)-10	KM23C4100H(FP)-12	KM23C4100H(FP)-15
			KM23C4200B-12	KM23C4200B-15	KM23C4200B-20

* New Product † Under Development

MASKROM-II (High Density)

CMOS	8M bit	1M × 8	KM23C8000A(G)-15	KM23C8000A(G)-20	KM23C8000A(G)-25
			† KM23C8000H(G)-10	† KM23C8000H(G)-12	† KM23C8000H(G)-15
			KM23C8001A-15	KM23C8001A-20	KM23C8001A-25
			† KM23C8001H-10	† KM23C8001H-12	† KM23C8001H-15
		1M × 8/ 512K × 16	KM23C8100A(G)-15	KM23C8100A(G)-20	KM23C8100A(G)-25
			KM23C8100AFP1-15	KM23C8100AFP1-20	KM23C8100AFP1-25
			KM23C8100AFP2-15	KM23C8100AFP2-20	KM23C8100AFP2-25
			† KM23C8100H(G)-10	† KM23C8100H(G)-12	† KM23C8100H(G)-15
			† KM23C8100HFP1-10	† KM23C8100HFP1-12	† KM23C8100HFP1-15
			† KM23C8100HFP2-10	† KM23C8100HFP2-12	† KM23C8100HFP2-15
	16M bit	2M × 8/ 1M × 16	KM23C16000(G)-15	KM23C16000(G)-20	KM23C16000(G)-25
			* KM23C16000FP-15	* KM23C16000FP-20	* KM23C16000FP-25
			† KM23C16100(G)-15	† KM23C16100(G)-20	† KM23C16100(G)-25
			† KM23C16100FP-15	† KM23C16100FP-20	† KM23C16100FP-25
	32M bit	4M × 8/ 2M × 16	† KM23C32000-15	† KM23C32000-20	† KM23C32000-25
			† KM23C32000G-15	† KM23C32000G-20	† KM23C32000G-25
			† KM23C32000FP-15	† KM23C32000FP-20	† KM23C32000FP-25
			† KM23C32100-15	† KM23C32100-20	† KM23C32100-25
			† KM23C32100G-15	† KM23C32100G-20	† KM23C32100G-25
			† KM23C32100FP-15	† KM23C32100FP-20	† KM23C32100FP-25

* New Product
† Under Development

1.7 Application Specific Memory

STANDARD FIFO

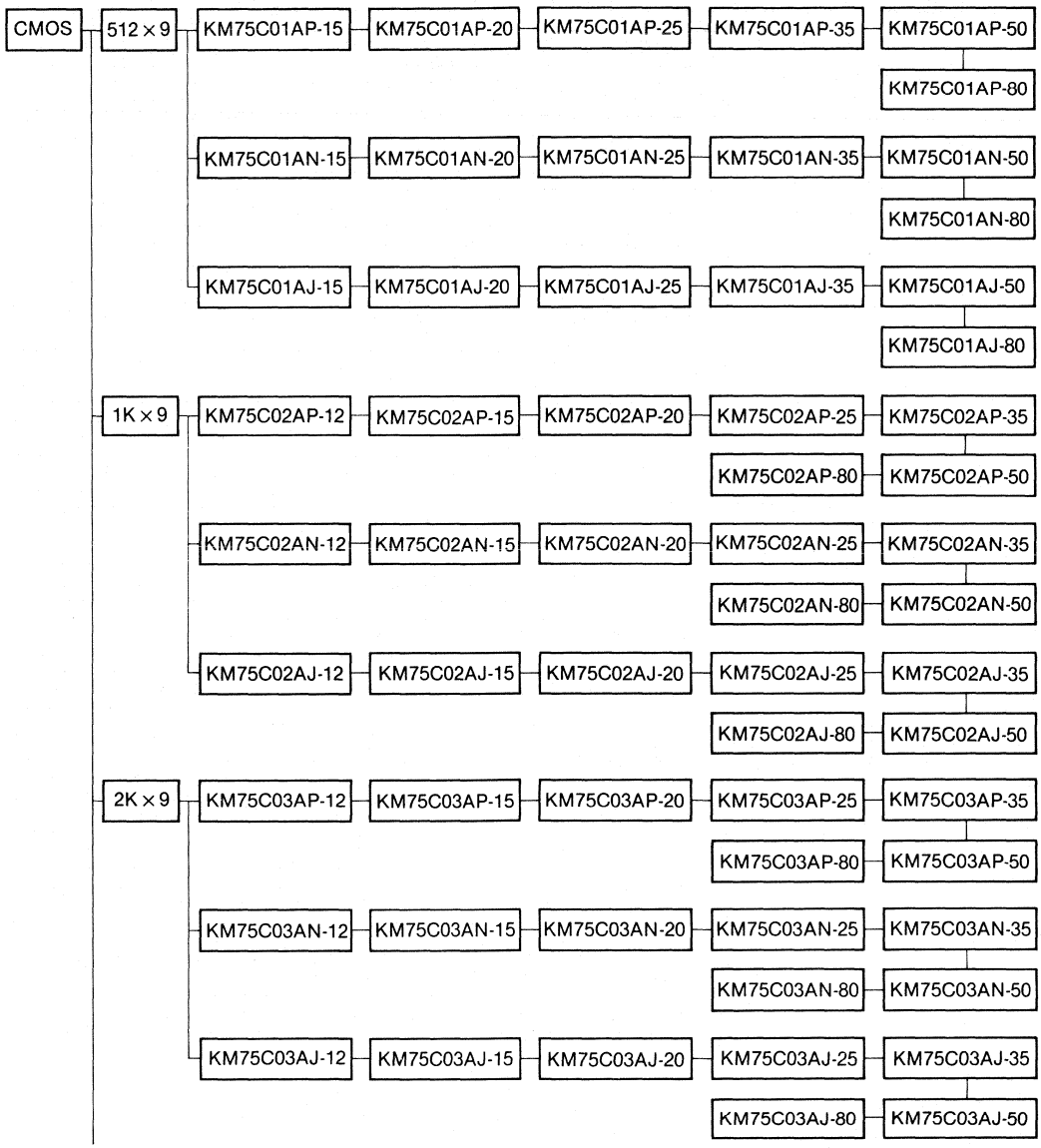

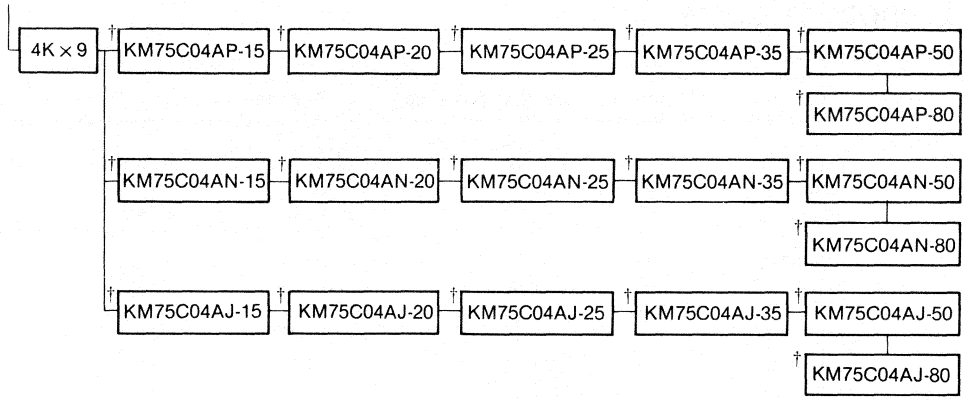

*AP: PDIP (0.6″)
AN: PDIP (0.3″)
AJ: PLCC
†: Preliminary Product

2. PRODUCT GUIDE

2.1 Dynamic RAM

Capacity	Part Number	Organization	Speed(ns)	Technology	Features	Packages	Remark
256K bit	KM41C256P	256K x 1	70/80/100	CMOS	Fast Page	16 Pin DIP	Now
	KM41C256J	256K x 1	70/80/100	CMOS	Fast Page	18 Pin PLCC	Now
	KM41C256Z	256K x 1	70/80/100	CMOS	Fast Page	16 Pin ZIP	Now
	KM41C257P	256K x 1	70/80/100	CMOS	Nibble Mode	16 Pin DIP	Now
	KM41C257J	256K x 1	70/80/100	CMOS	Nibble Mode	18 Pin PLCC	Now
	KM41C257Z	256K x 1	70/80/100	CMOS	Nibble Mode	16 Pin ZIP	Now
	KM41C258P	256K x 1	70/80/100	CMOS	Static Column	16 Pin DIP	Now
	KM41C258J	256K x 1	70/80/100	CMOS	Static Column	18 Pin PLCC	Now
	KM41C258Z	256K x 1	70/80/100	CMOS	Static Column	16 Pin ZIP	Now
	KM41C464P	64K x 4	70/80/100	CMOS	Fast Page	18 Pin DIP	Now
	KM41C464J	64K x 4	70/80/100	CMOS	Fast Page	18 Pin PLCC	Now
	KM41C464Z	64K x 4	70/80/100	CMOS	Fast Page	20 Pin ZIP	Now
	KM41C466P	64K x 4	70/80/100	CMOS	Static Column	18 Pin DIP	Now
	KM41C466J	64K x 4	70/80/100	CMOS	Static Column	18 Pin PLCC	Now
	KM41C466Z	64K x 4	70/80/100	CMOS	Static Column	20 Pin ZIP	Now
1M bit	KM41C1000CP	1M x 1	60/70/80	CMOS	Fast Page	18 Pin DIP	Now
	KM41C1000CJ	1M x 1	60/70/80	CMOS	Fast Page	20 Pin SOJ	Now
	KM41C1000CZ	1M x 1	60/70/80	CMOS	Fast Page	20 Pin ZIP	Now
	KM41C1000CV	1M x 1	60/70/80	CMOS	Fast Page	20 Pin TSOP-I(Forward)	Now
	KM41C1000CVR	1M x 1	60/70/80	CMOS	Fast Page	20 Pin TSOP-I(Reverse)	Now
	KM41C1000CT	1M x 1	60/70/80	CMOS	Fast Page	20 Pin TSOP-II(Forward)	Now
	KM41C1000CTR	1M x 1	60/70/80	CMOS	Fast Page	20 Pin TSOP-II(Reverse)	Now
	KM41C1000CLP	1M x 1	60/70/80	CMOS	Fast Page	18 Pin DIP	Now
	KM41C1000CLJ	1M x 1	60/70/80	CMOS	Fast Page	20 Pin SOJ	Now
	KM41C1000CLZ	1M x 1	60/70/80	CMOS	Fast Page	20 Pin ZIP	Now
	KM41C1000CLV	1M x 1	60/70/80	CMOS	Fast Page	20 Pin TSOP-I(Forward)	Now
	KM41C1000CLVR	1M x 1	60/70/80	CMOS	Fast Page	20 Pin TSOP-I(Reverse)	Now
	KM41C1000CLT	1M x 1	60/70/80	CMOS	Fast Page	20 Pin TSOP-II(Forward)	Now
	KM41C1000CLTR	1M x 1	60/70/80	CMOS	Fast Page	20 Pin TSOP-II(Reverse)	Now
	KM41C1000CSLP	1M x 1	60/70/80	CMOS	Fast Page	18 Pin DIP	Now
	KM41C1000CSLJ	1M x 1	60/70/80	CMOS	Fast Page	20 Pin SOJ	Now
	KM41C1000CSLZ	1M x 1	60/70/80	CMOS	Fast Page	20 Pin ZIP	Now
	KM41C1000CSLV	1M x 1	60/70/80	CMOS	Fast Page	20 Pin TSOP-I(Forward)	Now
	KM41C1000CSLVR	1M x 1	60/70/80	CMOS	Fast Page	20 Pin TSOP-I(Reverse)	Now
	KM41C1000CSLT	1M x 1	60/70/80	CMOS	Fast Page	20 Pin TSOP-II(Forward)	Now
	KM41C1000CSLTR	1M x 1	60/70/80	CMOS	Fast Page	20 Pin TSOP-II(Reverse)	Now
	KM41C1001CP	1M x 1	60/70/80	CMOS	Nibble Mode	18 Pin DIP	Now
	KM41C1001CJ	1M x 1	60/70/80	CMOS	Nibble Mode	20 Pin SOJ	Now
	KM41C1001CZ	1M x 1	60/70/80	CMOS	Nibble Mode	20 Pin ZIP	Now
	KM41C1001CV	1M x 1	60/70/80	CMOS	Nibble Mode	20 Pin TSOP-I(Forward)	Now
	KM41C1001CVR	1M x 1	60/70/80	CMOS	Nibble Mode	20 Pin TSOP-I(Reverse)	Now
	KM41C1001CT	1M x 1	60/70/80	CMOS	Nibble Mode	20 Pin TSOP-II(Forward)	Now
	KM41C1001CTR	1M x 1	60/70/80	CMOS	Nibble Mode	20 Pin TSOP-II(Reverse)	Now
	KM41C1002CP	1M x 1	60/70/80	CMOS	Static Column	18 Pin DIP	Now
	KM41C1002CJ	1M x 1	60/70/80	CMOS	Static Column	20 Pin SOJ	Now
	KM41C1002CZ	1M x 1	60/70/80	CMOS	Static Column	20 Pin ZIP	Now
	KM41C1002CV	1M x 1	60/70/80	CMOS	Static Column	20 Pin TSOP-I(Forward)	Now
	KM41C1002CVR	1M x 1	60/70/80	CMOS	Static Column	20 Pin TSOP-I(Reverse)	Now
	KM41C1002CT	1M x 1	60/70/80	CMOS	Static Column	20 Pin TSOP-II(Forward)	Now
	KM41C1002CTR	1M x 1	60/70/80	CMOS	Static Column	20 Pin TSOP-II(Reverse)	Now

Dynamic RAM (Continued)

Capacity	Part Number	Organization	Speed(ns)	Technology	Features	Packages	Remark
1M bit	KM44C256CP	256K x 4	60/70/80	CMOS	Fast Page	20 Pin DIP	Now
	KM44C256CJ	256K x 4	60/70/80	CMOS	Fast Page	20 Pin SOJ	Now
	KM44C256CZ	256K x 4	60/70/80	CMOS	Fast Page	20 Pin ZIP	Now
	KM44C256CV	256K x 4	60/70/80	CMOS	Fast Page	20 Pin TSOP-I(Forward)	Now
	KM44C256CVR	256K x 4	60/70/80	CMOS	Fast Page	20 Pin TSOP-I(Reverse)	Now
	KM44C256CT	256K x 4	60/70/80	CMOS	Fast Page	20 Pin TSOP-II(Forward)	Now
	KM44C256CTR	256K x 4	60/70/80	CMOS	Fast Page	20 Pin TSOP-II(Reverse)	Now
	KM44C256CLP	256K x 4	60/70/80	CMOS	Fast Page	20 Pin DIP	Now
	KM44C256CLJ	256K x 4	60/70/80	CMOS	Fast Page	20 Pin SOJ	Now
	KM44C256CLZ	256K x 4	60/70/80	CMOS	Fast Page	20 Pin ZIP	Now
	KM44C256CLV	256K x 4	60/70/80	CMOS	Fast Page	20 Pin TSOP-I(Forward)	Now
	KM44C256CLVR	256K x 4	60/70/80	CMOS	Fast Page	20 Pin TSOP-I(Reverse)	Now
	KM44C256CLT	256K x 4	60/70/80	CMOS	Fast Page	20 Pin TSOP-II(Forward)	Now
	KM44C256CLTR	256K x 4	60/70/80	CMOS	Fast Page	20 Pin TSOP-II(Reverse)	Now
	KM44C256CSLP	256K x 4	60/70/80	CMOS	Fast Page	20 Pin DIP	Now
	KM44C256CSLJ	256K x 4	60/70/80	CMOS	Fast Page	20 Pin SOJ	Now
	KM44C256CSLZ	256K x 4	60/70/80	CMOS	Fast Page	20 Pin ZIP	Now
	KM44C256CSLV	256K x 4	60/70/80	CMOS	Fast Page	20 Pin TSOP-I(Forward)	Now
	KM44C256CSLVR	256K x 4	60/70/80	CMOS	Fast Page	20 Pin TSOP-I(Reverse)	Now
	KM44C256CSLT	256K x 4	60/70/80	CMOS	Fast Page	20 Pin TSOP-II(Forward)	Now
	KM44C256CSLTR	256K x 4	60/70/80	CMOS	Fast Page	20 Pin TSOP-II(Reverse)	Now
	KM44C266CP	256K x 4	60/70/80	CMOS	Fast Page with WPB	20 Pin DIP	Now
	KM44C266CJ	256K x 4	60/70/80	CMOS	Fast Page with WPB	20 Pin SOJ	Now
	KM44C266CZ	256K x 4	60/70/80	CMOS	Fast Page with WPB	20 Pin ZIP	Now
	KM44C266CV	256K x 4	60/70/80	CMOS	Fast Page with WPB	20 Pin TSOP-I(Forward)	Now
	KM44C266CVR	256K x 4	60/70/80	CMOS	Fast Page with WPB	20 Pin TSOP-I(Reverse)	Now
	KM44C266CT	256K x 4	60/70/80	CMOS	Fast Page with WPB	20 Pin TSOP-II(Forward)	Now
	KM44C266CTR	256K x 4	60/70/80	CMOS	Fast Page with WPB	20 Pin TSOP-II(Reverse)	Now
	KM44C258CP	256K x 4	60/70/80	CMOS	Static Column	20 Pin DIP	Now
	KM44C258CJ	256K x 4	60/70/80	CMOS	Static Column	20 Pin SOJ	Now
	KM44C258CZ	256K x 4	60/70/80	CMOS	Static Column	20 Pin ZIP	Now
	KM44C258CV	256K x 4	60/70/80	CMOS	Static Column	20 Pin TSOP-I(Forward)	Now
	KM44C258CVR	256K x 4	60/70/80	CMOS	Static Column	20 Pin TSOP-I(Reverse)	Now
	KM44C258CT	256K x 4	60/70/80	CMOS	Static Column	20 Pin TSOP-II(Forward)	Now
	KM44C258CTR	256K x 4	60/70/80	CMOS	Static Column	20 Pin TSOP-II(Reverse)	Now
	KM44C268CP	256K x 4	60/70/80	CMOS	Static Column with WPB	20 Pin DIP	Now
	KM44C268CJ	256K x 4	60/70/80	CMOS	Static Column with WPB	20 Pin SOJ	Now
	KM44C268CZ	256K x 4	60/70/80	CMOS	Static Column with WPB	20 Pin ZIP	Now
	KM44C268CV	256K x 4	60/70/80	CMOS	Static Column with WPB	20 Pin TSOP-I(Forward)	Now
	KM44C268CVR	256K x 4	60/70/80	CMOS	Static Column with WPB	20 Pin TSOP-I(Reverse)	Now
	KM44C268CT	256K x 4	60/70/80	CMOS	Static Column with WPB	20 Pin TSOP-II(Forward)	Now
	KM44C268CTR	256K x 4	60/70/80	CMOS	Static Column with WPB	20 Pin TSOP-II(Reverse)	Now
4M bit	*KM41C4000BP	4M x 1	60/70/80	CMOS	Fast Page	20 Pin DIP	Now
	*KM41C4000BJ	4M x 1	60/70/80	CMOS	Fast Page	20 Pin SOJ	Now
	*KM41C4000BZ	4M x 1	60/70/80	CMOS	Fast Page	20 Pin ZIP	Now
	*KM41C4000BV	4M x 1	60/70/80	CMOS	Fast Page	20 Pin TSOP-I(Forward)	Now
	*KM41C4000BVR	4M x 1	60/70/80	CMOS	Fast Page	20 Pin TSOP-I(Reverse)	Now
	*KM41C4000BT	4M x 1	60/70/80	CMOS	Fast Page	20 Pin TSOP-II(Forward)	Now
	*KM41C4000BTR	4M x 1	60/70/80	CMOS	Fast Page	20 Pin TSOP-II(Reverse)	Now
	*KM41C4000BLP	4M x 1	60/70/80	CMOS	Fast Page	20 Pin DIP	Now

Dynamic RAM (Continued)

Capacity	Part Number	Organization	Speed(ns)	Technology	Features	Packages	Remark
4M bit	*KM41C4000BLJ	4M x 1	60/70/80	CMOS	Fast Page	20 Pin SOJ	Now
	*KM41C4000BLZ	4M x 1	60/70/80	CMOS	Fast Page	20 Pin ZIP	Now
	*KM41C4000BLV	4M x 1	60/70/80	CMOS	Fast Page	20 Pin TSOP-I(Forward)	Now
	*KM41C4000BLVR	4M x 1	60/70/80	CMOS	Fast Page	20 Pin TSOP-I(Reverse)	Now
	*KM41C4000BLT	4M x 1	60/70/80	CMOS	Fast Page	20 Pin TSOP-II(Forward)	Now
	*KM41C4000BLTR	4M x 1	60/70/80	CMOS	Fast Page	20 Pin TSOP-II(Reverse)	Now
	*KM41C4000BSLP	4M x 1	60/70/80	CMOS	Fast Page	20 Pin DIP	Now
	*KM41C4000BSLJ	4M x 1	60/70/80	CMOS	Fast Page	20 Pin SOJ	Now
	*KM41C4000BSLZ	4M x 1	60/70/80	CMOS	Fast Page	20 Pin ZIP	Now
	*KM41C4000BSLV	4M x 1	60/70/80	CMOS	Fast Page	20 Pin TSOP-I(Forward)	Now
	*KM41C4000BSLVR	4M x 1	60/70/80	CMOS	Fast Page	20 Pin TSOP-I(Reverse)	Now
	*KM41C4000BSLT	4M x 1	60/70/80	CMOS	Fast Page	20 Pin TSOP-II(Forward)	Now
	*KM41C4000BSLTR	4M x 1	60/70/80	CMOS	Fast Page	20 Pin TSOP-II(Reverse)	Now
4M B/W	KM48C512J	512K x 8	70/80/100	CMOS	Fast Page	28 Pin SOJ	Now
	KM48C512Z	512K x 8	70/80/100	CMOS	Fast Page	28 Pin ZIP	Now
	KM48C512T	512K x 8	70/80/100	CMOS	Fast Page	28 Pin TSOP-II(Forward)	Now
	KM48C512TR	512K x 8	70/80/100	CMOS	Fast Page	28 Pin TSOP-II(Reverse)	Now
	KM48C512LJ	512K x 8	70/80/100	CMOS	Fast Page	28 Pin SOJ	Now
	KM48C512LZ	512K x 8	70/80/100	CMOS	Fast Page	28 Pin ZIP	Now
	KM48C512LT	512K x 8	70/80/100	CMOS	Fast Page	28 Pin TSOP-II(Forward)	Now
	KM48C512LTR	512K x 8	70/80/100	CMOS	Fast Page	28 Pin TSOP-II(Reverse)	Now
	KM48C512SLJ	512K x 8	70/80/100	CMOS	Fast Page	28 Pin SOJ	Now
	KM48C512SLZ	512K x 8	70/80/100	CMOS	Fast Page	28 Pin ZIP	Now
	KM48C512SLT	512K x 8	70/80/100	CMOS	Fast Page	28 Pin TSOP-II(Forward)	Now
	KM48C512SLTR	512K x 8	70/80/100	CMOS	Fast Page	28 Pin TSOP-II(Reverse)	Now
	KM48C512LLJ	512K x 8	70/80/100	CMOS	Fast Page	28 Pin SOJ	Now
	KM48C512LLZ	512K x 8	70/80/100	CMOS	Fast Page	28 Pin ZIP	Now
	KM48C512LLT	512K x 8	70/80/100	CMOS	Fast Page	28 Pin TSOP-II(Forward)	Now
	KM48C512LLTR	512K x 8	70/80/100	CMOS	Fast Page	28 Pin TSOP-II(Reverse)	Now
	KM49C512J	512K x 9	70/80/100	CMOS	Fast Page	28 Pin SOJ	Now
	KM49C512Z	512K x 9	70/80/100	CMOS	Fast Page	28 Pin ZIP	Now
	KM49C512T	512K x 9	70/80/100	CMOS	Fast Page	28 Pin TSOP-II(Forward)	Now
	KM49C512TR	512K x 9	70/80/100	CMOS	Fast Page	28 Pin TSOP-II(Reverse)	Now
	KM49C512LJ	512K x 9	70/80/100	CMOS	Fast Page	28 Pin SOJ	Now
	KM49C512LZ	512K x 9	70/80/100	CMOS	Fast Page	28 Pin ZIP	Now
	KM49C512LT	512K x 9	70/80/100	CMOS	Fast Page	28 Pin TSOP-II(Forward)	Now
	KM49C512LTR	512K x 9	70/80/100	CMOS	Fast Page	28 Pin TSOP-II(Reverse)	Now
	KM49C512SLJ	512K x 9	70/80/100	CMOS	Fast Page	28 Pin SOJ	Now
	KM49C512SLZ	512K x 9	70/80/100	CMOS	Fast Page	28 Pin ZIP	Now
	KM49C512SLT	512K x 9	70/80/100	CMOS	Fast Page	28 Pin TSOP-II(Forward)	Now
	KM49C512SLTR	512K x 9	70/80/100	CMOS	Fast Page	28 Pin TSOP-II(Reverse)	Now
	KM49C512LLJ	512K x 9	70/80/100	CMOS	Fast Page	28 Pin SOJ	Now
	KM49C512LLZ	512K x 9	70/80/100	CMOS	Fast Page	28 Pin ZIP	Now
	KM49C512LLT	512K x 9	70/80/100	CMOS	Fast Page	28 Pin TSOP-II(Forward)	Now
	KM49C512LLTR	512K x 9	70/80/100	CMOS	Fast Page	28 Pin TSOP-II(Reverse)	Now
	KM416C256J	256K x 16	70/80/100	CMOS	Fast Page	40 Pin SOJ	Now
	KM416C256Z	256K x 16	70/80/100	CMOS	Fast Page	40 Pin ZIP	Now
	KM416C256LJ	256K x 16	70/80/100	CMOS	Fast Page	40 Pin SOJ	Now
	KM416C256LZ	256K x 16	70/80/100	CMOS	Fast Page	40 Pin ZIP	Now
	KM416C256SLJ	256K x 16	70/80/100	CMOS	Fast Page	40 Pin SOJ	Now
	KM416C256SLZ	256K x 16	70/80/100	CMOS	Fast Page	40 Pin ZIP	Now
	KM416C256LLJ	256K x 16	70/80/100	CMOS	Fast Page	40 Pin SOJ	Now
	KM416C256LLZ	256K x 16	70/80/100	CMOS	Fast Page	40 Pin ZIP	Now

Dynamic RAM (Continued)

Capacity	Part Number	Organization	Speed(ns)	Technology	Features	Packages	Remark
4M B/W	KM418C256J	256K x 18	70/80/100	CMOS	Fast Page	40 Pin SOJ	Now
	KM418C256Z	256K x 18	70/80/100	CMOS	Fast Page	40 Pin ZIP	Now
	KM418C256LJ	256K x 18	70/80/100	CMOS	Fast Page	40 Pin SOJ	Now
	KM418C256LZ	256K x 18	70/80/100	CMOS	Fast Page	40 Pin ZIP	Now
	KM418C256SLJ	256K x 18	70/80/100	CMOS	Fast Page	40 Pin SOJ	Now
	KM418C256SLZ	256K x 18	70/80/100	CMOS	Fast Page	40 Pin ZIP	Now
	KM418C256LLJ	256K x 18	70/80/100	CMOS	Fast Page	40 Pin SOJ	Now
	KM418C256LLZ	256K x 18	70/80/100	CMOS	Fast Page	40 Pin ZIP	Now
16M	KM41C16000J	16M x 1	60/70/80	CMOS	Fast Page	24 PIN SOJ	Now
	KM41C16000T	16M x 1	60/70/80	CMOS	Fast Page	24 Pin TSOP-II	Now
	KM41C16000TR	16M x 1	60/70/80	CMOS	Fast Page	24 Pin TSOP-II	Now
	KM41C16000LJ	16M x 1	60/70/80	CMOS	Fast Page	24 PIN SOJ	Now
	KM41C16000LT	16M x 1	60/70/80	CMOS	Fast Page	24 Pin TSOP-II	Now
	KM41C16000LTR	16M x 1	60/70/80	CMOS	Fast Page	24 Pin TSOP-II	Now
	KM41C16100J	16M x 1	60/70/80	CMOS	Fast Page	24 PIN SOJ	Now
	KM41C16100T	16M x 1	60/70/80	CMOS	Fast Page	24 Pin TSOP-II	Now
	KM41C16100TR	16M x 1	60/70/80	CMOS	Fast Page	24 Pin TSOP-II	Now
	KM41C16100LJ	16M x 1	60/70/80	CMOS	Fast Page	24 PIN SOJ	Now
	KM41C16100LT	16M x 1	60/70/80	CMOS	Fast Page	24 Pin TSOP-II	Now
	KM41C16100LTR	16M x 1	60/70/80	CMOS	Fast Page	24 Pin TSOP-II	Now
	KM44C4000J	4M x 4	60/70/80	CMOS	Fast Page	24 PIN SOJ	Now
	KM44C4000T	4M x 4	60/70/80	CMOS	Fast Page	24 Pin TSOP-II	Now
	KM44C4000TR	4M x 4	60/70/80	CMOS	Fast Page	24 Pin TSOP-II	Now
	KM44C4000LJ	4M x 4	60/70/80	CMOS	Fast Page	24 PIN SOJ	Now
	KM44C4000LT	4M x 4	60/70/80	CMOS	Fast Page	24 Pin TSOP-II	Now
	KM44C4000LTR	4M x 4	60/70/80	CMOS	Fast Page	24 Pin TSOP-II	Now
	KM44C4100J	4M x 4	60/70/80	CMOS	Fast Page	24 PIN SOJ	Now
	KM44C4100T	4M x 4	60/70/80	CMOS	Fast Page	24 Pin TSOP-II	Now
	KM44C4100TR	4M x 4	60/70/80	CMOS	Fast Page	24 Pin TSOP-II	Now
	KM44C4100LJ	4M x 4	60/70/80	CMOS	Fast Page	24 PIN SOJ	Now
	KM44C4100LT	4M x 4	60/70/80	CMOS	Fast Page	24 Pin TSOP-II	Now
	KM44C4100LTR	4M x 4	60/70/80	CMOS	Fast Page	24 Pin TSOP-II	Now
16M B/W	†KM48C2000J	2M x 8	60/70/80	CMOS	Fast Page	28 Pin SOJ	3Q, '92
	†KM48C2100J	2M x 8	60/70/80	CMOS	Fast Page	28 Pin SOJ	3Q, '92
	†KM416C1000J	1M x 16	70/80/100	CMOS	Fast Page	42 Pin SOJ	4Q, '92
	†KM416C1200J	1M x 16	70/80/100	CMOS	Fast Page	42 Pin SOJ	4Q, '92

*: New Product †: Preliminary Product

2.2 Dynamic RAM Module

Based Component	Part Number	Organization	Speed(ns)	Feature	Package	PCB height(In)	Remark
1M DRAM Base	KMM58256CN	256K × 8	60/70/80	Fast Page	S, 30 Pin SIMM	0.65	Now
	KMM59256CN	256K × 9	70/80	Fast Page	S, 30 Pin SIMM	0.65	Now
	KMM581000C	1M × 8	60/70/80	Fast Page	S, 30 Pin SIMM	0.805	Now
	KMM591000C	1M × 9	60/70/80	Fast Page	S, 30 Pin SIMM	0.805	Now
	KMM536256C/CG	256K × 36	70/80	Fast Page	S, 72 Pin SIMM	1.0	Now
	KMM532512CV/CVG	512K × 32	60/70/80	Fast Page	D, 72 Pin SIMM	1.0	Now
	KMM536512C/CG	512K × 36	70/80	Fast Page	D, 72 Pin SIMM	1.0	Now
	KMM540512C/CG/CM	512K × 40	60/70/80	Fast Page	D, 72 Pin SIMM	1.0	Now
4M DRAM Base	KMM581000AN	1M × 8	70/80/100	Fast Page	S, 30 Pin SIMM	0.65	Now
	KMM581020AN	1M × 8	70/80/100	Fast Page	S, 30 Pin SIMM	0.65	Now
	*KMM581000BN	1M × 8	60/70/80	Fast Page	S, 30 Pin SIMM	0.65	'92. 3Q
	KMM591000AN	1M × 9	70/80/100	Fast Page	S, 30 Pin SIMM	0.65	Now
	KMM591020AN	1M × 9	70/80/100	Fast Page	S, 30 Pin SIMM	0.65	Now
	*KMM591000BN	1M × 9	60/70/80	Fast Page	S, 30 Pin SIMM	0.65	'92. 3Q
	KMM584000A	4M × 8	70/80/100	Fast Page	S, 30 Pin SIMM	0.805	Now
	KMM584020A	4M × 8	70/80/100	Fast Page	S, 30 Pin SIMM	0.805	Now
	*KMM584000B	4M × 8	60/70/80	Fast Page	S, 30 Pin SIMM	0.805	'92. 3Q
	KMM594000A	4M × 9	70/80/100	Fast Page	S, 30 Pin SIMM	0.805	Now
	KMM594020A	4M × 9	70/80/100	Fast Page	S, 30 Pin SIMM	0.805	Now
	*KMM594000B	4M × 9	60/70/80	Fast Page	S, 30 Pin SIMM	0.805	'92. 3Q
	KMM5321000AV/AVG	1M × 32	70/80/100	Fast Page	S, 72 Pin SIMM	0.855	Now
	*KMM5321000BV/BVG	1M × 32	60/70/80	Fast Page	S, 72 Pin SIMM	0.855	Now
	KMM5361000A/AG	1M × 36	70/80/100	Fast Page	D, 72 Pin SIMM	1.0	Now
	KMM5361000A1/A1G	1M × 36	70/80/100	Fast Page	S, 72 Pin SIMM	1.0	Now
	*KMM5361000B/BG	1M × 36	60/70/80	Fast Page	D, 72 Pin SIMM	1.0	'92. 3Q
	*KMM5361000B1/B1G	1M × 36	60/70/80	Fast Page	S, 72 Pin SIMM	1.0	'92. 3Q
	KMM5322000AV/AVG	2M × 32	70/80/100	Fast Page	D, 72 Pin SIMM	1.0	Now
	*KMM5322000BV/BVG	2M × 32	60/70/80	Fast Page	D, 72 Pin SIMM	1.0	'92. 3Q
	KMM5362000A/AG	2M × 36	70/80/100	Fast Page	D, 72 Pin SIMM	1.25	Now
	*KMM5362000A1/A1G	2M × 36	70/80/100	Fast Page	D, 72 Pin SIMM	1.0	Now
	*KMM5362000B/BG	2M × 36	60/70/80	Fast Page	D, 72 Pin SIMM	1.25	'92. 3Q
	*KMM5362000B1/B1G	2M × 36	60/70/80	Fast Page	D, 72 Pin SIMM	1.0	'92. 3Q
	KMM5401000A/AG/AM	1M × 40	70/80/100	Fast Page	S, 72 Pin SIMM	1.0	Now
	*KMM5401000B/BG/BM	1M × 40	60/70/80	Fast Page	S, 72 Pin SIMM	1.0	'92. 3Q
	KMM5402000A/AG/AM	2M × 40	70/80/100	Fast Page	D, 72 Pin SIMM	1.0	Now
	*KMM5402000B/BG/BM	2M × 40	60/70/80	Fast Page	D, 72 Pin SIMM	1.0	'92. 3Q

2.2 Dynamic RAM Module (Continued)

Based Component	Part Number	Organization	Speed(ns)	Feature	Package	PCB height(In)	Remark
4M B/W Wide DRAM Base	*KMM536256W/WG	256K x 36	70/80/100	Fast Page	S, 72 Pin SIMM	0.65	Now
	*KMM532512W3/W3G	512K x 32	70/80/100	Fast Page	S, 72 Pin SIMM	1.0	Now
	*KMM536512W3/W3G	512K x 36	70/80/100	Fast Page	S, 72 Pin SIMM	1.0	Now
16M DRAM Base	*KMM584100N	4M x 8	60/70/80	Fast Page	S, 30 Pin SIMM	0.65	Now
	*KMM594100N	4M x 9	60/70/80	Fast Page	S, 30 Pin SIMM	0.65	Now
	*KMM5816000/T	16M x 8	60/70/80	Fast Page	D, 30 Pin SIMM	0.8	Now
	*KMM5816100/T	16M x 8	60/70/80	Fast Page	D, 30 Pin SIMM	0.8	Now
	*KMM5916000/T	16M x 9	60/70/80	Fast Page	D, 30 Pin SIMM	0.8	Now
	*KMM5916100/T	16M x 9	60/70/80	Fast Page	D, 30 Pin SIMM	0.8	Now
	*KMM5324100V/VG/VP	4M x 32	60/70/80	Fast Page	S, 72 Pin SIMM	1.0	Now
	*KMM5364100/G	4M x 36	60/70/80	Fast Page	D, 72 Pin SIMM	1.0	Now
	*KMM5364000H/HG	4M x 36	60/70/80	Fast Page	S, 72 Pin SIMM	1.25	Now
	*KMM5364100H/HG	4M x 36	60/70/80	Fast Page	S, 72 Pin SIMM	1.25	Now
	*KMM5328100V/VG/VP	8M x 32	60/70/80	Fast Page	D, 72 Pin SIMM	1.0	Now
	*KMM5368100/G	8M x 36	60/70/80	Fast Page	D, 72 Pin SIMM	1.375	Now
	*KMM5368000H/HG	8M x 36	60/70/80	Fast Page	D, 72 Pin SIMM	1.25	Now
	*KMM5368100H/HG	8M x 36	60/70/80	Fast Page	D, 72 Pin SIMM	1.25	Now
	*KMM5404000/G	4M x 40	60/70/80	Fast Page	D, 72 Pin SIMM	1.0	Now
	*KMM5404100/G	4M x 40	60/70/80	Fast Page	D, 72 Pin SIMM	1.0	Now
16M B/W Wide DRAM Base	††KMM5321000W/WG	1M x 32	70/80/100	Fast Page	S, 72 Pin SIMM	0.65	'92. 4Q
	††KMM5322000W/WG	2M x 32	70/80/100	Fast Page	D, 72 Pin SIMM	0.8	'92. 4Q

Note: S: Single Side, D: Double Side
*: New Product, ††: Under Development

2.3 Video RAM

Capacity	Part Number	Organization	Speed (ns)	Technology	Features	Packages	Remark
1M bit	KM424C256J	256K x 4	RAM: 80/100/120 SAM: 25/25/35	CMOS	Minimum Feature	28 Pin SOJ	Now
	KM424C256Z	256K x 4	RAM: 80/100/120 SAM: 25/25/35	CMOS	Minimum Feature	28 Pin ZIP	Now
	††KM424C257J	256K x 4	RAM: 60/80/100 SAM: 20/20/25	CMOS	Extended Feature	28 Pin SOJ 44 Pin TSOP II	3Q, '92
	††KM424C257Z	256K x 4	RAM: 60/80/100 SAM: 20/20/25	CMOS	Extended Feature	28 Pin ZIP	3Q, '92
	††KM428C128Z	128K x 8	RAM: 60/80/100 SAM: 20/20/25	CMOS	Extended Feature	40 Pin ZIP 44 Pin TSOP II	4Q, '91
	††KM428C128J	128K x 8	RAM: 60/80/100 SAM: 20/20/25	CMOS	Extended Feature	40 Pin SOJ	4Q, '91
256K bit	KM424C64P	64K x 4	RAM: 100/120 SAM: 25/35	CMOS	Minimum Feature	24 Pin DIP	Now
	KM424C64Z	64K x 4	RAM: 100/120 SAM: 25/35	CMOS	Minimum Feature	24 Pin ZIP	Now

2.4 Static RAM

Slow SRAM Function Guide

Capacity	Part Name	Organization	Speed	Technology	Power Dissipation			Package	Remark
					Active(max.) TTL. DC	Active(max.) TTL. Min	Standby(max.) CMOS		
64K	KM6264BL	8K x 8	70/100/120	CMOS	15mA	55mA	100μA	DIP/SDIP/SOP	Now
	KM6264BL-L	8K x 8	70/100/120	CMOS	15mA	55mA	10μA	DIP/SDIP/SOP	Now
256K	KM62256AL	32K x 8	80/100/120	CMOS	45mA	70mA	100μA	DIP/SOP	Now
	KM62256AL-L	32K x 8	80/100/120	CMOS	45mA	70mA	50μA	DIP/SOP	Now
	KM62256BL	32K x 8	70/85/100/120	CMOS	15mA	70mA	100μA	DIP/SDIP/SOP	Now
	KM62256BL-L	32K x 8	70/85/100/120	CMOS	15mA	70mA	20μA	DIP/SDIP/SOP	Now
	*KM62256BLI	32K x 8	70/100	CMOS	20mA	70mA	50μA	DIP/SOP	Now
	*KM62256BL-V	32K x 8	240	CMOS	15mA	70mA	50μA	DIP/SDIP/SOP	Now
512K	*KM68512L	64K x 8	55/70/85/100	CMOS	15mA	70mA	100μA	SOP/TSOP	Now
	*KM68512L-L	64K x 8	55/70/85/100	CMOS	15mA	70mA	20μA	SOP/TSOP	Now
1M	KM681000L	128K x 8	70/85/100/120	CMOS	25mA	70mA	100μA	DIP/SOP	Now
	KM681000L-L	128K x 8	70/85/100/120	CMOS	25mA	70mA	20μA	DIP/SOP	Now
	*KM681000AL	128K x 8	70/85/100/120	CMOS	15mA	70mA	100μA	DIP/SOP/TSOP	Now
	*KM681000AL-L	128K x 8	70/85/100/120	CMOS	15mA	70mA	20μA	DIP/SOP/TOP	Now
	*KM681000ALI	128K x 8	70/100	CMOS	20mA	70mA	100μA	DIP/SOP	Now
	*KM681000ALI-L	128K x 8	70/100	CMOS	20mA	70mA	50μA	DIP/SOP	Now
	*KM681000AL-V	128K x 8	240	CMOS	15mA	70mA	50μA	DIP/SOP/TSOP	Now
4M	†KM684000L	512K x 8	55/70/85/100	CMOS	25mA	70mA	100μA	DIP/SOP/TSOP	Now
	†KM684000L-L	512K x 8	55/70/85/100	CMOS	25mA	70mA	20μA	DIP/SOP/TSOP	Now

*: New Product †: Preliminary ††: Under Development

Pseudo SRAM Function Guide

Capacity	Part Name	Organization	Speed	Technology	Power Dissipation		Package	Remark
					Active(max.) TTL. Min	Standby(max.) CMOS		
1M	KM658128	128K x 8	80/100/120	CMOS	70mA	1mA	DIP/SDIP/SOP	Now
	KM658128L	128K x 8	80/100/120	CMOS	70mA	200μA	DIP/SDIP/SOP	Now
	KM658128L-L	128K x 8	80/100/120	CMOS	70mA	100μA	DIP/SDIP/SOP	Now
	KM658128LD	128K x 8	80/100/120	CMOS	70mA	200μA	DIP/SDIP/SOP	Now
	KM658128LD-L	128K x 8	80/100/120	CMOS	70mA	100μA	DIP/SDIP/SOP	Now
4M	*KM658512L	512K x 8	80/100/120	CMOS	75mA	200μA	DIP/SOP/TSOP	Now
	*KM658512L-L	512K x 8	80/100/120	CMOS	75mA	100μA	DIP/SOP/TSOP	Now

*: New Product †: Preliminary ††: Under Development

High Speed & Ultra High Speed SRAM

Capacity	Part Name	Organization	Speed (ns)	Technology	Power Dissipation		Package	Remark
					Active Max(mA)	Standby Max(mA)		
64K	KM6465A	16K × 4	25/35/45	CMOS	120	2	22SDIP	Now
	KM6465AL	16K × 4	25/35/45	CMOS	120	0.1	22SDIP	Now
	*KM6465B	16K × 4	12/15/20/25	CMOS	140	1	22SDIP	Now
	KM6465BL	16K × 4	12/15/20/25	CMOS	140	0.1	22DIP	Now
	KM6466A	16K × 4	25/35/45	CMOS	120	2	22SDIP/SOJ	Now
	KM6466AL	16K × 4	25/35/45	CMOS	120	0.1	22SDIP/SOJ	Now
	*KM6466B	16K × 4	12/15/20/25	CMOS	140	1	24SDIP/SOJ	Now
	KM6466BL	16K × 4	12/15/20/25	CMOS	140	0.1	24DIP/SOJ	Now
	*KM6865B	8K × 8	12/15/20/25	CMOS	140	1	28SDIP/SOJ	Now
	KM6865BL	8K × 8	12/15/20/25	CMOS	140	0.1	28DIP/SOJ	Now
256K	KM61257A	256K × 1	25/35/45	CMOS	100	2	24SDIP/SOJ	Now
	KM61257AL	256K × 1	25/35/45	CMOS	100	0.1	24SDIP/SOJ	Now
	KM64257A	64K × 4	25/35/45	CMOS	120	2	24SDIP/SOJ	Now
	KM64257AL	64K × 4	25/35/45	CMOS	120	0.1	24SDIP/SOJ	Now
	†KM64258B	64K × 4	15/20/25	CMOS	140	2	28SDIP/SOJ	Now
	†KM64B258A	64K × 4	8/10/12	BiCMOS	185	20	28SOJ	Now
	*KM64259B	64K × 4	15/20/25	CMOS	140	2	28SDIP/SOJ	Now
	*KM64260B	64K × 4	20/25	CMOS	140	2	28SDIP/SOJ	Now
	*KM68257B	32K × 8	15/20/25	CMOS	150	2	28SDIP/SOJ	Now
	*KM68257BL	32K × 8	15/20/25	CMOS	150	0.1	28SDIP/SOJ	Now
	†KM68B257A	32K × 8	8/10/12	BiCMOS	185	20	28SOJ	4Q '92
	KM69B257A	32K × 9	8/10/12	BiCMOS	185	20	28SOJ	4Q '92
512K	†KM616513	32K × 16	17/20/25	CMOS	180	2	40SOJ	2Q '93
1M	*KM611001	1M × 1	20/25/35	CMOS	130	2	28SDIP/SOJ	Now
	*KM641001	256K × 4	20/25/35	CMOS	150	2	28SDIP/SOJ	Now
	*KM641005	256K × 4	20/25/35	CMOS	150	2	32SDIP/SOJ	Now
	KM64B1002	256K × 4	10/12	BiCMOS	150	10	28SOJ	4Q '92
	KM64B1003	256K × 4	10/12	BiCMOS	150	10	32SOJ	4Q '92
	*KM681001	128K × 8	20/25/35	CMOS	170	2	32SDIP/SOJ	Now
	KM68B1002	512K × 8	10/12	BiCMOS	160	10	32SOJ	4Q '92

Synchronous SRAM

Capacity	Part Name	Organization	Speed (ns)	Technology	Power Dissipation		Package	Remark
					Active Max(mA)	Standby Max(mA)		
1M	†KM741006	256K × 4	12	CMOS	190	40	36SOJ	4Q '92

2.5 EEPROM

Capacity	Part Number	Organization	Speed(ns)	Technology	Features	Packages	Remarks
256 bit	KM93C06/G/GD/I	16 x 16	1MHz	CMOS	Ext.-timed	8DIP/8SOP	Now
	KM93C07/G/GD/I	16 x 16	1MHz	CMOS	Self-timed	8DIP/8SOP	Now
1K bit	KM93C46/G/GD/I	64 x 16	1MHz	CMOS	Self-timed	8DIP/8SOP	Now
	KM93C46V/VG/VGD/I	64 x 16	250KHz	CMOS	3.0V Operation	8DIP/8SOP	Now
2K bit	KM93C56/G/GD/I	128 x 16	1MHz	CMOS	Auto Erase, Self-timed	8DIP/8SOP	3Q '92
	KM93CS56/G/GD/I	128 x 16	1MHz	CMOS	Data Protect	8DIP/8SOP	3Q '92
	KM93C57/G/GD/I	256 x 8/128 x 16	1MHz	CMOS	Select Organization	8DIP/8SOP	3Q '92
	KM93C56V/VG/VGD/I	128 x 16	1MHz	CMOS	2.0V Operation	8DIP/8SOP	4Q '92
	KM93C57V/VG/VGD/I	256 x 8/128 x 16	1MHz	CMOS	2.0V Operation	8DIP/8SOP	4Q '92
4K bit	KM93C66/G/GD/I	256 x 16	1MHz	CMOS	Auto Erase, Self-timed	8DIP/8SOP	3Q '92
	KM93CS66/G/GD/I	256 x 16	1MHz	CMOS	Data Protect	8DIP/8SOP	3Q '92
	KM93C67/G/GD/I	512 x 8/128 x 16	1MHz	CMOS	Select Organization	8DIP/8SOP	3Q '92
	KM93C66V/VG/VGD/1	256 x 16	1MHz	CMOS	2.0V Operation	8DIP/8SOP	4Q '92
	KM93C67V/VG/VGD/I	512 x 8/128 x 16	1MHz	CMOS	2.0V Operation	8DIP/8SOP	4Q '92
16K bit	KM28C16/J	2K x 8	150/200/250	CMOS	32B Page Mode, D-P	24DIP/32PLCC	Now
	KM28C16I/JI	2K x 8	200/250	CMOS	Industrial	24DIP/32PLCC	Now
	KM28C17/J	2K x 8	150/200/250	CMOS	32B Page Mode, D-P, R/B	28DIP/32PLCC	Now
	KM28C17I/JI	2K x 8	200/250	CMOS	Industrial	28DIP/32PLCC	Now
64K bit	KM28C64A/AJ	8K x 8	120/150/200	CMOS	64B Page Mode, D-P, T-B	28DIP/32PLCC	Now
	KM28C64AI/AJI	8K x 8	120/150/200	CMOS	Industrial	28DIP/32PLCC	Now
	KM28C65A/AJ	8K x 8	120/150/200	CMOS	64B Page Mode, D-P, R/B	28DIP/32PLCC	Now
	KM28C65AI/AJI	8K x 8	120/150/200	CMOS	Industrial	28DIP/32PLCC	Now
256K bit	KM28C256/J	32K x 8	150/200/250	CMOS	64B Page Mode, D-P, T-B	28DIP/32PLCC	Now
	KM28C256I/JI	32K x 8	150/200/250	CMOS	Industrial	28DIP/32PLCC	Now
	KM28C256A/AJ	32K x 8	120/150/200	CMOS	64B Page Mode, D-P, T-B	28DIP/32PLCC	4Q '92
	KM28C256AI/AJI	32K x 8	120/150/200	CMOS	Industrial	28DIP/32PLCC	4Q '92
1M bit	KM29C010/J/T	128K x 8	120/150/200	CMOS	128B Page Mode, D-P, T-B	32DIP/32PLCC	4Q '92
	KM29C010I/JI	128K x 8	120/150/200	CMOS	Industrial	32TSOP	4Q '92

*: D-P: Data-Polling, R/B: Ready/Busy, T-B: Toggle Bit

2.6 Mask ROM

Capacity	Part Number	Organization	Speed(ns)	Technology	Features	Packages	Remark
256K bit	KM23C256(G)	32K x 8	120/150/200	CMOS	Programmable CE & OE	28DIP(32SOP)	Now
512K bit	KM23C512(G)	64K x 8	120/150/200	CMOS	Programmable CE & OE	28DIP(32SOP)	Now
1M bit	KM23C1000	128K x 8	120/150/200	CMOS	Programmable CE	28DIP	Now
	KM23C1001	128K x 8	120/150/200	CMOS	Programmable OE	28DIP	Now
	KM23C1010(G)	128K x 8	120/150/200	CMOS	Programmable CE & OE	32DIP(32SOP)	Now
	KM23C1010J	128K x 8	120/150/200	CMOS	Programmable CE & OE	32PLCC	Now
	KM23C1011(G)	128K x 8	120/150/200	CMOS	Programmable OE	32DIP(32SOP)	Now
2M bit	KM23C2000(G)	256K x 8	150/200/250	CMOS	Programmable CE & OE	32DIP(32SOP)	Now
	†KM23C2000H(G)	256K x 8	100/120/150	CMOS	Programmable CE & OE	32DIP(32SOP)	3Q '92
	KM23C2001	256K x 8	150/200/250	CMOS	Programmable OE	32DIP	Now
	†KM23C2001H	256K x 8	100/120/150	CMOS	Programmable OE	32DIP	3Q '92
	KM23C2100(FP)	256K x 8/ 128K x 16	150/200/250	CMOS	Programmable CE & OE Word/Byte Mode	40DIP(44QFP)	Now
	†KM23C2100H(FP)	256K x 8/ 128K x 16	100/120/150	CMOS	Programmable CE & OE Word/Byte Mode	40DIP(44QFP)	3Q '92
4M bit	KM23C4000A(G)	512K x 8	150/200/250	CMOS	Programmable CE & OE	32DIP(32SOP)	Now
	*KM23C4000B(G)	512K x 8	120/150/200	CMOS	Programmable CE & OE	32DIP(32SOP)	Now
	KM23C4000H(G)	512K x 8	100/120/150	CMOS	Programmable CE & OE	32DIP(32SOP)	Now
	KM23C4001A(G)	512K x 8	150/200/250	CMOS	Programmable OE	32DIP(32SOP)	Now
	*KM23C4001B(G)	512K x 8	120/150/200	CMOS	Programmable OE	32DIP(32SOP)	Now
	KM23C4001H(G)	512K x 8	100/120/150	CMOS	Programmable OE	32DIP(32SOP)	Now
	*KM23C4100BG	512K x 8/ 256K x 16	120/150/200	CMOS	Programmable CE & OE Word/Byte Mode	40SOP	Now
	KM23C4100A(FP)	512K x 8/ 256K x 16	150/200/250	CMOS	Programmable CE & OE Word/Byte Mode	40DIP(44QFP)	Now
	†KM23C4100B(FP)	512K x 8/ 256K x x 16	120/150/200	CMOS	Programmable CE & OE Word/Byte Mode	40DIP(44QFP)	2Q '92
	KM23C4100H(FP)	512K x 8/ 256K x 16	100/120/150	CMOS	Programmable CE & OE Word/Byte Mode	40DIP(44QFP)	Now
	KM23C4200B	512K x 8/ 256K x 16	120/150/200	CMOS	Programmable CE & OE Word/Byte Mode	40DIP	Now

1

Mask ROM (Continued)

Capacity	Part Number	Organization	Speed(ns)	Technology	Features	Packages	Remark
8M bit	KM23C8000A(G)	1M x 8	150/200/250	CMOS	Programmable CE & OE	32DIP(32SOP)	Now
	†KM23C8000H(G)	1M x 8	100/120/150	CMOS	Programmable CE & OE	32DIP(32SOP)	3Q '92
	KM23C8001A	1M x 8	150/200/250	CMOS	Programmable OE	32DIP	Now
	†KM23C8001H	1M x 8	100/120/150	CMOS	Programmable OE	32DIP	3Q '92
	KM23C8100A(G)	1M x 8/ 512K x 16	150/200/250	CMOS	Programmable CE & OE Word/Byte Mode	40DIP(44SOP)	Now
	KM23C8100AFP1	1M x 8/ 512K x 16	150/200/250	CMOS	Programmable CE & OE Word/Byte Mode	44QFP	Now
	KM23C8100AFP2	1M x 8/ 512K x 16	150/200/250	CMOS	Programmable CE & OE Word/Byte Mode	64QFP	Now
	†KM23C8100H(G)	1M x 8/ 512K x 16	100/120/150	CMOS	Programmable CE & OE Word/Byte Mode	40DIP(44SOP)	3Q '92
	†KM23C8100HFP1	1M x 8/ 512K x 16	100/120/150	CMOS	Programmable CE & OE Word/Byte Mode	44QFP	3Q '92
	†KM23C8100HFP2	1M x 8/ 512K x 16	100/120/150	CMOS	Programmable CE & OE Word/Byte Mode	64QFP	3Q '92
16M bit	KM23C16000(G)	2M x 8/ 1M x 16	150/200/250	CMOS	Programmable CE & OE Word/Byte Mode	42DIP(44SOP)	Now
	*KM23C16000FP	2M x 8/ 1M x 16	150/200/250	CMOS	Programmable CE & OE Word/Byte Mode	64QFP	Now
	†KM23C16100(G)	2M x 8/ 1M x 16	150/200/250	CMOS	Programmable CE & OE Word/Byte Mode	42DIP(44SOP)	3Q '92
	†KM23C16100FP	2M x 8/ 1M x 16	150/200/250	CMOS	Programmable CE & OE Word/Byte Mode	64QFP	3Q '92
32M bit	†KM23C32000	2M x 16	150/200/250	CMOS	Programmable CE & OE	42DIP	4Q '92
	†KM23C32000G	4M x 8/ 2M x 16	150/200/250	CMOS	Programmable CE & OE Word/Byte Mode	44SOP	4Q '92
	†KM23C32000FP	4M x 8/ 2M x 16	150/200/250	CMOS	Programmable CE & OE Word/Byte Mode	64QFP	4Q '92
	†KM23C32100	2M x 16	150/200/250	CMOS	Programmable CE & OE	42DIP	4Q '92
	†KM23C32100G	4M x 8/ 2M x 16	150/200/250	CMOS	Programmable CE & OE Word/Byte Mode	44SOP	4Q '92
	†KM23C32100FP	4M x 8/ 2M x 16	150/200/250	CMOS	Programmable CE & OE Word/Byte Mode	64QFP	4Q '92

*: New Product †: Under Development

2.7 FIFO

Capacity	Part Number	Organization	Speed	Technology	Features	Package	Remark
Standard FIFO	KM75C01AP	512 × 9	15/20/25/ 35/50/80	CMOS	Parallel FIFO	28PDIP (0.6″)	Now
	KM75C01AN	512 × 9	15/20/25/ 35/50/80	CMOS	Parallel FIFO	28PDIP (0.3″)	Now
	KM75C01AJ	512 × 9	15/20/25/ 35/50/80	CMOS	Parallel FIFO	32PLCC	Now
	KM75C02AP	1K × 9	12/15/20/25/ 35/50/80	CMOS	Parallel FIFO	28PDIP (0.6″)	Now
	KM75C02AN	1K × 9	12/15/20/25/ 35/50/80	CMOS	Parallel FIFO	28PDIP (0.3″)	Now
	KM75C02AJ	1K × 9	12/15/20/25/ 35/50/80	CMOS	Parallel FIFO	32PLCC	Now
	KM75C03AP	2K × 9	12/15/20/25/ 35/50/80	CMOS	Parallel FIFO	28PDIP (0.6″)	Now
	KM75C03AN	2K × 9	12/15/20/25/ 35/50/80	CMOS	Parallel FIFO	28PDIP (0.3″)	Now
	KM75C03AJ	2K × 9	12/15/20/25/ 35/50/80	CMOS	Parallel FIFO	32PLCC	Now
	KM75C04AP	4K × 9	20/25/ 35/50/80	CMOS	Parallel FIFO	28PDIP (0.6″)	4Q '92
	KM75C04AN	4K × 9	20/25/ 35/50/80	CMOS	Parallel FIFO	28PDIP (0.3″)	4Q '92
	KM75C04AJ	4K × 9	20/25/ 35/50/80	CMOS	Parallel FIFO	32PLCC	4Q '92

*: New Product
†: Preliminary Product

NOTES

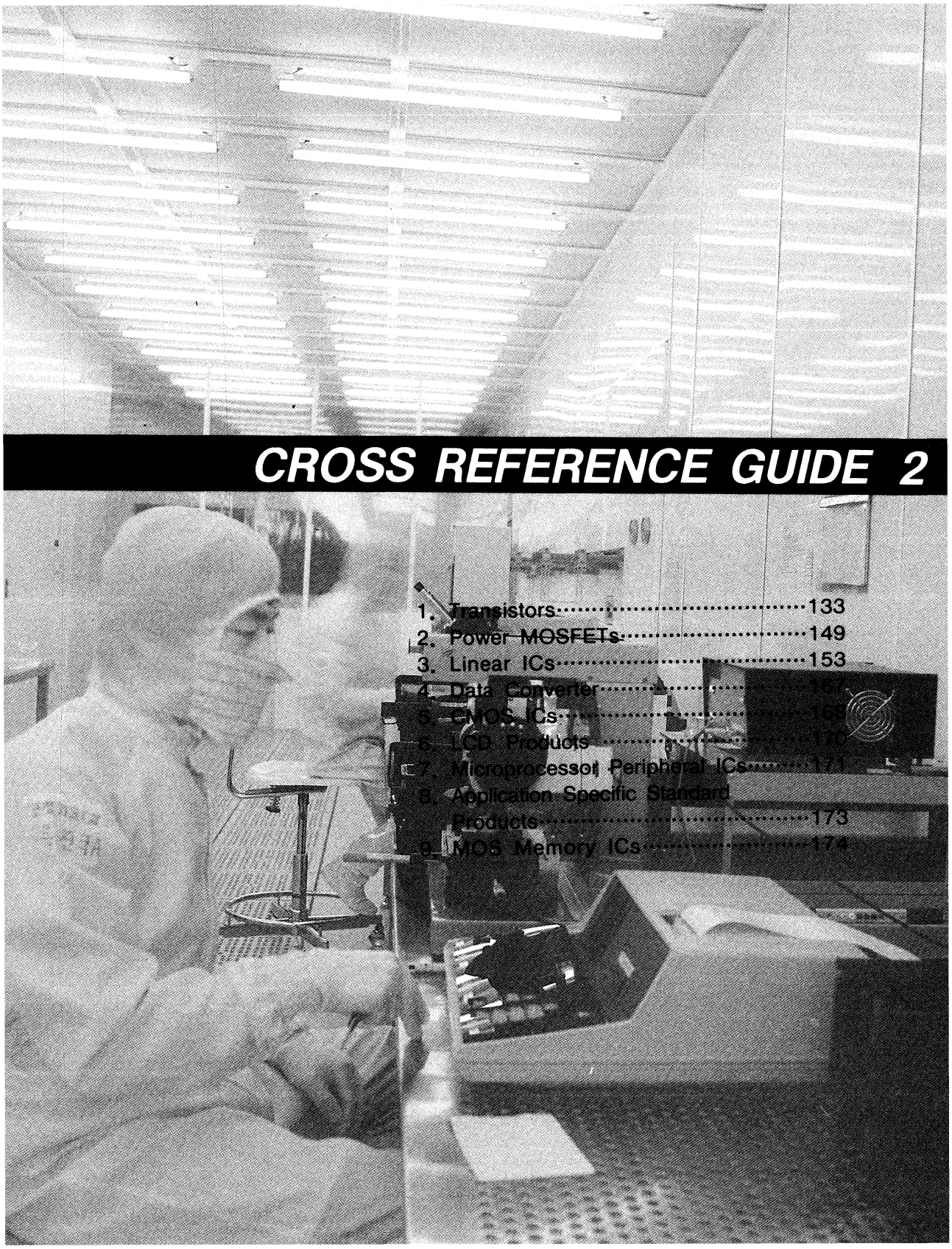

CROSS REFERENCE GUIDE 2

TYPE	MAKER	SAMSUNG
2N3903	MOTOROLA	2N3903
2N3904	MOTOROLA	2N3904
2N3905	MOTOROLA	2N3905
2N3906	MOTOROLA	2N3906
2N4123	MOTOROLA	2N4123
2N4124	MOTOROLA	2N4124
2N4125	MOTOROLA	2N4125
2N4126	MOTOROLA	2N4126
2N4400	MOTOROLA	2N4400
2N4401	MOTOROLA	2N4401
2N4402	MOTOROLA	2N4402
2N4403	MOTOROLA	2N4403
2N5086	MOTOROLA	2N5086
2N5087	MOTOROLA	2N5087
2N5088	MOTOROLA	2N5088
2N5089	MOTOROLA	2N5089
2N5209	MOTOROLA	2N5209
2N5210	MOTOROLA	2N5210
2N5400	MOTOROLA	2N5400
2N5401	MOTOROLA	2N5401
2N5550	MOTOROLA	2N5550
2N5551	MOTOROLA	2N5551
2N6427	MOTOROLA	2N6427
2N6428	MOTOROLA	2N6428
2N6428A	MOTOROLA	2N6428A
2N6515	MOTOROLA	2N6515
2N6516	MOTOROLA	2N6516
2N6517	MOTOROLA	2N6517
2N6518	MOTOROLA	2N6518
2N6519	MOTOROLA	2N6519
2N6520	MOTOROLA	2N6520
2SA1004	HITACHI	KSA733
2SA1010	N.E.C	KSA1010
2SA1013	TOSHIBA	KSA1013
2SA1015	TOSHIBA	KSA733
2SA1016	SANYO	KSA992
2SA1017	SANYO	KSA910
2SA1019	SANYO	KSA910
2SA1020	TOSHIBA	KSA1220A
2SA1025	HITACHI	KSA733
2SA1026	MITSUBISHI	KSA733
2SA1027	MITSUBISHI	KSA733
2SA1029	HITACHI	KSA733
2SA1030	HITACHI	KSA733
2SA1031	HITACHI	KSA812
2SA1032	HITACHI	KSA812
2SA1033	HITACHI	KSA733
2SA1034	MITSUSHITA	KSA812
2SA1035	MATSUSHITA	KSA812
2SA1037	ROHM	KSA812
2SA1047	SANYO	KSA1142
2SA1048	TOSHIBA	KSA1175

TYPE	MAKER	SAMSUNG
2SA1052	HITACHI	KSA812
2SA1072A	FUJITSU	KSA1050
2SA1084	HITACHI	KSA992
2SA1085	HITACHI	KSA992
2SA1092	MATSUSHITA	KSA733
2SA1096	MATSUSHITA	KSB744
2SA1096A	MATSUSHITA	KSB744A
2SA1110	MATSUSHITA	KSA1220A
2SA1121	HITACHI	KSA1182
2SA1136	ROHM	KSA992
2SA1137	ROHM	KSA992
2SA1144	TOSHIBA	KSA1142
2SA1150	TOSHIBA	KSA1150
2SA1151	N.E.C	KSA733
2SA1156	N.E.C	KSA1156
2SA1158	TOSHIBA	KSA954
2SA1162	TOSHIBA	KSA812
2SA1174	N.E.C	KSA1174
2SA1175	N.E.C	KSA1175
2SA1178	MATSUSHITA	KSA1220A
2SA1179	SANYO	KSA812
2SA1182	TOSHIBA	KSA1182
2SA1184	TOSHIBA	KSA1220A
2SA1190	HITACHI	KSA992
2SA1191	HITACHI	KSA992
2SA1198	ROHM	KSA954
2SA1199	ROHM	KSA954
2SA1201	TOSHIBA	KSA1201
2SA1202	TOSHIBA	KSA1202
2SA1203	TOSHIBA	KSA1203
2SA1209	SANYO	KSA1142
2SA1210	SANYO	KSA1142
2SA1214	TOSHIBA	KSA1013
2SA1220	N.E.C	KSA1220
2SA1220A	N.E.C	KSA1220A
2SA1221	N.E.C	KSA1013
2SA1222	N.E.C	KSA1013
2SA1235	MITSUBISHI	KSA812
2SA1246	SANYO	KSA953
2SA1252	SANYO	KSA812
2SA1253	SANYO	KSA1175
2SA1266	K.E.C	KSA733
2SA1267	K.E.C	KSA1175
2SA1268	K.E.C	KSA992
2SA1269	K.E.C	KSA1174
2SA1270	K.E.C	KSA539
2SA1271	K.E.C	KSA643
2SA1272	K.E.C	KSA1150
2SA1275	K.E.C	KSA1013
2SA1276	K.E.C	KSA473
2SA1288	SANYO	KSB834
2SA1290	SANYO	KSB708

TYPE	MAKER	SAMSUNG
2SA1298	TOSHIBA	KSA1298
2SA1299	MITSUBISHI	KSA1174
2SA1309	MATSUSHITA	KSA1175
2SA1310	MATSUSHITA	KSA1174
2SA1311	TOSHIBA	KSA811
2SA1312	TOSHIBA	KSA811
2SA1316	TOSHIBA	KSA992
2SA1317	SANYO	KSA1175
2SA1318	SANYO	KSA733
2SA1323	MATSUSHITA	KSA1175
2SA1324	TOSHIBA	KSA812
2SA1325	TOSHIBA	KSA811
2SA1334	TOSHIBA	KSA952
2SA1335	TOSHIBA	KSA1174
2SA1337	HITACHI	KSA1175
2SA1340	HITACHI	KSA953
2SA1341	SANYO	KSR2104
2SA1342	SANYO	KSR2103
2SA1343	SANYO	KSR2108
2SA1344	SANYO	KSR2102
2SA1345	SANYO	KSR2204
2SA1346	SANYO	KSR2203
2SA1347	SANYO	KSR2208
2SA1348	SANYO	KSR2202
2SA1350	HITACHI	KSA1175
2SA1351	HITACHI	KSA953
2SA1352	SANYO	KSA1142
2SA1358	TOSHIBA	KSA1220A
2SA1359	TOSHIBA	KSB744
2SA1360	TOSHIBA	KSA1142
2SA1365	MITSUBISHI	KSA1298
2SA1367	MITSUBISHI	KSA1175
2SA1368	MITSUBISHI	KSA1202
2SA1369	MITSUBISHI	KSA1203
2SA1373	HITACHI	KSA953
2SA1374	HITACHI	KSA1175
2SA1377	TOSHIBA	KSA733
2SA1378	TOSHIBA	KSB810
2SA1380	SANYO	KSA1142
2SA1390	HITACHI	KSA1150
2SA1411	N.E.C	KSA5040
2SA1416	SANYO	KSA1201
2SA1418	SANYO	KSA1201
2SA1420	SANYO	KSR2004
2SA1421	SANYO	KSR2003
2SA1422	SANYO	KSR2008
2SA1423	SANYO	KSR2002
2SA1453	TOSHIBA	KSA1175
2SA1463	N.E.C	KSA1203
2SA1466	N.E.C	KSA1150
2SA1467	N.E.C	KSA1298
2SA1478	SANYO	KSA1142

TYPE	MAKER	SAMSUNG
2SA1496	SANYO	KSR2110
2SA1497	SANYO	KSR2210
2SA1504	K.E.C	KSA812
2SA1505	K.E.C	KSA1182
2SA1507	SANYO	KSA1220A
2SA1508	SANYO	KSR2112
2SA1509	SANYO	KSR2212
2SA1510	SANYO	KSR2109
2SA1511	SANYO	KSR2209
2SA1512	MATSUSHITA	KSB810
2SA1530	MITSUBISHI	KSA812
2SA1542	ROHM	KSA733
2SA1543	ROHM	KSA733
2SA1547	ROHM	KSA1175
2SA1561	ROHM	KSA1175
2SA1563	SANYO	KSR2105
2SA1564	SANYO	KSR2205
2SA1589	SANYO	KSR2111
2SA1590	SANYO	KSR2211
2SA1591	SANYO	KSR2214
2SA1597	SANYO	KSR2114
2SA2420	SANYO	KSR2004
2SA473	TOSHIBA	KSA473
2SA480	SONY	KSA733
2SA489	TOSHIBA	KSB596
2SA494	TOSHIBA	KSA733
2SA495	TOSHIBA	KSA733
2SA509	TOSHIBA	KSA643
2SA539	N.E.C	KSA733
2SA542	N.E.C	KSA733
2SA543	N.E.C	KSA733
2SA550A	MATSUSHITA	KSA733
2SA555	FUJITSU	KSA733
2SA556	FUJITSU	KSA733
2SA557	FUJITSU	KSA733
2SA561	TOSHIBA	KSA733
2SA562	TOSHIBA	KSA539
2SA564	MATSUSHITA	KSA733
2SA564A	MATSUSHITA	KSA733
2SA567	HITACHI	KSA733
2SA568	MITSUBISHI	KSA539
2SA569	MITSUBISHI	KSA733
2SA570	MITSUBISHI	KSA733
2SA573	J.R.C	KSA733
2SA574	J.R.C	KSA733
2SA575	J.R.C	KSA733
2SA576	J.R.C	KSA953
2SA577	J.R.C	KSA953
2SA608	SANYO	KSA733
2SA609	SANYO	KSA733
2SA610	J.R.C	KSA733
2SA611	J.R.C	KSA733

TYPE	MAKER	SAMSUNG
2SA615	TOSHIBA	KSB596
2SA616	TOSHIBA	KSB596
2SA620	J.R.C	KSA733
2SA623	MITSUBISHI	KSA473
2SA624	MITSUBISHI	KSB744
2SA628	MITSUBISHI	KSA733
2SA628A	MITSUBISHI	KSA733
2SA633	N.E.C	KSA473
2SA636A	N.E.C	KSB834
2SA642	N.E.C	KSA539
2SA643	N.E.C	KSA643
2SA659	SANYO	KSA953
2SA661	TOSHIBA	KSA954
2SA666	MATSUSHITA	KSA733
2SA670	HITACHI	KSB596
2SA671	HITACHI	KSB596
2SA672	HITACHI	KSA733
2SA673	HITACHI	KSA643
2SA678	SONY	KSA953
2SA683	MATSUSHITA	KSA643
2SA695	MATSUSHITA	KSA643
2SA696	MATSUSHITA	KSA953
2SA697	MATSUSHITA	KSA953
2SA699	MATSUSHITA	KSA473
2SA701	SANYO	KSA733
2SA702	SANYO	KSA733
2SA703	MITSUBISHI	KSA473
2SA705	SONY	KSA953
2SA707	N.E.C	KSA643
2SA711	N.E.C	KSA733
2SA715	HITACHI	KSA473
2SA718	N.E.C	KSA733
2SA719	MATSUSHITA	KSA643
2SA720	MATSUSHITA	KSA953
2SA723	N.E.C	KSA539
2SA725	MITSUBISHI	KSA733
2SA726	MITSUBISHI	KSA733
2SA728	MITSUBISHI	KSA1175
2SA731	MATSUSHITA	KSA953
2SA732	FUJITSU	KSA643
2SA733	N.E.C	KSA733
2SA738	HITACHI	KSA473
2SA740	TOSHIBA	KSA940
2SA743	HITACHI	KSB744
2SA760	N.E.C	KSA733
2SA763	J.R.C	KSA733
2SA767	TOSHIBA	KSA733
2SA768	SANKEN	KSB596
2SA769	SANKEN	KSB596
2SA770	SANKEN	KSB707
2SA771	SANKEN	KSB708
2SA774	MATSUSHITA	KSA733

TYPE	MAKER	SAMSUNG
2SA774A	MATSUSHITA	KSA733
2SA776	TOSHIBA	KSA733
2SA778	HITACHI	KSA910
2SA779	HITACHI	KSA473
2SA780	HITACHI	KSB744
2SA781	HITACHI	KSA733
2SA782	ROHM	KSA733
2SA783	ROHM	KSA733
2SA784	ROHM	KSA733
2SA785	ROHM	KSA733
2SA786	ROHM	KSA733
2SA789	ROHM	KSA733
2SA803	ROHM	KSA910
2SA811	N.E.C	KSA811
2SA812	N.E.C	KSA812
2SA813	N.E.C	KSA733
2SA824	ROHM	KSA733
2SA826	ROHM	KSA733
2SA827	ROHM	KSA733
2SA828	ROHM	KSA733
2SA829	ROHM	KSA733
2SA838	MATSUSHITA	KSA733
2SA839	TOSHIBA	KSB546
2SA843	MATSUSHITA	KSB546
2SA844	HITACHI	KSA733
2SA854	ROHM	KSA953
2SA866	J.R.C	KSA733
2SA867	J.R.C	KSA733
2SA869	J.R.C	KSA953
2SA870	J.R.C	KSA953
2SA871	J.R.C	KSA733
2SA872	HITACHI	KSA992
2SA873	FUJITSU	KSA733
2SA874	ROHM	KSA708
2SA880	MATSUSHITA	KSA733
2SA885	MATSUSHITA	KSB744
2SA886	MATSUSHITA	KSB744
2SA888	MATSUSHITA	KSA733
2SA889	MATSUSHITA	KSA733
2SA890	MATSUSHITA	KSA643
2SA891	MATSUSHITA	KSA953
2SA896	SONY	KSA910
2SA897	SONY	KSB744
2SA898	FUJITSU	KSA1142
2SA899	FUJITSU	KSA1142
2SA901	MITSUBISHI	KSA733
2SA905	MITSUBISHI	KSA910
2SA914	MATSUSHITA	KSA1142
2SA915	HITACHI	KSA643
2SA916	HITACHI	KSA643
2SA917	HITACHI	KSA643

TYPE	MAKER	SAMSUNG
2SA918	FUJITSU	KSA953
2SA923	HITACHI	KSA643
2SA924	HITACHI	KSA733
2SA927	FUJITSU	KSA953
2SA933	ROHM	KSA733
2SA937	ROHM	KSA733
2SA938	SONY	KSA953
2SA940	TOSHIBA	KSA940
2SA941	TOSHIBA	KSA992
2SA942	TOSHIBA	KSA992
2SA950	TOSHIBA	KSA643
2SA952	N.E.C	KSA643
2SA953	N.E.C	KSA953
2SA954	N.E.C	KSA954
2SA957	SANKEN	KSB546
2SA958	SANKEN	KSB546
2SA963	MATSUSHITA	KSB744
2SA965	TOSHIBA	KSA965
2SA970	TOSHIBA	KSA992
2SA972	MATSUSHITA	KSA733
2SA973	MATSUSHITA	KSA733
2SA977	MATSUSHITA	KSA1142
2SA977A	MATSUSHITA	KSA1142
2SA979	MITSUBISHI	KSA992
2SA984	SANYO	KSA708
2SA985	N.E.C	KSA940
2SA989	N.E.C	KSA733
2SA990	N.E.C	KSA733
2SA992	N.E.C	KSA992
2SA993	HITACHI	KSA953
2SA994	MITSUBISHI	KSA733
2SA999	MITSUBISHI	KSA733
2SB1000	HITACHI	KSA1203
2SB1004	TOSHIBA	KSB601
2SB1012K	HITACHI	KSB795
2SB1025	HITACHI	KSA1201
2SB1026	HITACHI	KSA1201
2SB1030	MATSUSHITA	KSB810
2SB1034	TOSHIBA	KSB795
2SB1049	MATSUSHITA	KSA733
2SB1053	MATSUSHITA	KSA812
2SB1059	HITACHI	KSB1116
2SB1066	ROHM	KSB744
2SB1067	TOSHIBA	KSB795
2SB1069	MATSUSHITA	KSB744
2SB1075	MATSUSHITA	KSB744
2SB1089	N.E.C	KSB834
2SB1115	N.E.C	KSA1201
2SB1116	N.E.C	KSB1116
2SB1116A	N.E.C	KSB1116A
2SB1121	SANYO	KSA1203
2SB1122	SANYO	KSA1201

TYPE	MAKER	SAMSUNG
2SB1127	SANYO	KSB1151
2SB1128	TOSHIBA	KSB794
2SB1140	SANYO	KSB1151
2SB1142	SANYO	KSB772
2SB1143	SANYO	KSB1151
2SB1144	SANYO	KSA1220A
2SB1149	N.E.C	KSB1149
2SB1151	N.E.C	KSB1151
2SB1165	SANYO	KSB1151
2SB1188	ROHM	KSA1203
2SB1189	ROHM	KSA1201
2SB1206	MATSUSHITA	KSA1175
2SB1207	MATSUSHITA	KSB810
2SB1212	ROHM	KSA1013
2SB1266	SANYO	KSB834
2SB1271	SANYO	KSB708
2SB1273	SANYO	KSB834
2SB1276	ROHM	KSA953
2SB1279	ROHM	KSC945
2SB1296	SANYO	KSA1150
2SB434	TOSHIBA	KSB596
2SB435	TOSHIBA	KSB596
2SB507	SANYO	KSB596
2SB508	SANYO	KSB596
2SB509	SANYO	KSB596
2SB511	SANYO	KSA473
2SB512	MATSUSHITA	KSB596
2SB512A	MATSUSHITA	KSB596
2SB513	MITSUBISHI	KSB596
2SB521	SONY	KSB596
2SB522	SONY	KSB596
2SB523	MITSUBISHI	KSB596
2SB524	MITSUBISHI	KSB596
2SB528	MITSUBISHI	KSB546
2SB529	MITSUBISHI	KSB772
2SB542	MITSUBISHI	KSA539
2SB546	N.E.C	KSB546
2SB559	SANYO	KSB772
2SB560	SANYO	KSA916
2SB561	HITACHI	KSA643
2SB562	HITACHI	KSA928A
2SB563	N.E.C	KSB596
2SB565	HITACHI	KSB596
2SB566	HITACHI	KSB596
2SB568	HITACHI	KSA940
2SB572	MOTOROLA	KSB596
2SB573	MOTOROLA	KSB596
2SB574	MOTOROLA	KSB596
2SB596	TOSHIBA	KSB596
2SB598	SANYO	KSA643
2SB601	N.E.C	KSB601
2SB604	MATSUSHITA	KSB596

TYPE	MAKER	SAMSUNG
2SB605	N.E.C	KSA708
2SB605	N.E.C	KSC1845
2SB620	MATSUSHITA	KSA733
2SB621	MATSUSHITA	KSA643
2SB628	N.E.C	KSA940
2SB631	SANYO	KSA1220
2SB641	MATSUSHITA	KSA733
2SB642	MATSUSHITA	KSA733
2SB643	MATSUSHITA	KSA642
2SB646A	HITACHI	KSA910
2SB647A	HITACHI	KSA916
2SB676	TOSHIBA	KSB601
2SB677	TOSHIBA	KSB601
2SB686	TOSHIBA	KSB601
2SB687	TOSHIBA	KSB601
2SB698	SANYO	KSA643
2SB707	N.E.C	KSB707
2SB708	N.E.C	KSB708
2SB709	MATSUSHITA	KSA812
2SB715	HITACHI	KSA910
2SB716	HITACHI	KSA910
2SB719	HITACHI	KSB546
2SB720	HITACHI	KSB546
2SB721	HITACHI	KSA643
2SB725	MATSUSHITA	KSA733
2SB738	HITACHI	KSA928A
2SB739	HITACHI	KSA928A
2SB744	N.E.C	KSB744
2SB746	HITACHI	KSA643
2SB761	MATSUSHITA	KSB834
2SB762	MATSUSHITA	KSB596
2SB766	MATSUSHITA	KSA1203
2SB767	MATSUSHITA	KSA1202
2SB772	N.E.C	KSB772
2SB775	SANYO	KSA1010
2SB782	HITACHI	KSB596
2SB783	HITACHI	KSB596
2SB786	ROHM	KSB794
2SB789	MATSUSHITA	KSA1201
2SB794	N.E.C	KSB794
2SB795	N.E.C	KSB795
2SB798	N.E.C	KSA1203
2SB800	N.E.C	KSA1202
2SB803	N.E.C	KSA1201
2SB805	N.E.C	KSA1201
2SB808	SANYO	KSB810
2SB810	N.E.C	KSB810
2SB811	N.E.C	KSA1150
2SB815	SANYO	KSA1298
2SB822	ROHM	KSB1116
2SB831	HITACHI	KSA1298
2SB834	TOSHIBA	KSB834

TYPE	MAKER	SAMSUNG
2SB850	FUJI	KSB707
2SB850A	FUJI	KSB708
2SB857	HITACHI	KSB596
2SB858	HITACHI	KSB596
2SB862	FUJI	KSB601
2SB864	HITACHI	KSA733
2SB870	MATSUSHITA	KSA1010
2SB876	HITACHI	KSA1220A
2SB877	HITACHI	KSA1220A
2SB880	SANYO	KSB601
2SB885	SANYO	KSB601
2SB890	ROHM	KSA539
2SB891	ROHM	KSB744
2SB894	MATSUSHITA	KSA733
2SB895	MATSUSHITA	KSB794
2SB898	HITACHI	KSB834
2SB899	HITACHI	KSB834
2SB900	HITACHI	KSB596
2SB901	HITACHI	KSB596
2SB902	MATSUSHITA	KSA812
2SB919	SANYO	KSB707
2SB921	SANYO	KSA1010
2SB970	MATSUSHITA	KSA1298
2SB984	N.E.C	KSA1013
2SB988	K.E.C	KSB834
2SB989	K.E.C	KSB596
2SB992	TOSHIBA	KSA1010
2SB993	TOSHIBA	KSB708
2SC1004	TOSHIBA	KSD5004
2SC1004A	TOSHIBA	KSD5004
2SC1005	TOSHIBA	KSD5006
2SC1006	N.E.C	KSC945
2SC1007	N.E.C	KSC945
2SC1013	MITSUBISHI	KSC1173
2SC1023	FUJITSU	KSC1675
2SC1024	SANYO	KSD526
2SC1026	FUJITSU	KSC1675
2SC1032	FUJITSU	KSC1675
2SC1034	SONY	KSD5004
2SC1035	SANYO	KSC1070
2SC1036	SANYO	KSC1070
2SC1046	SANYO	KSD5004
2SC1047	MATSUSHITA	KSC1674
2SC1060	HITACHI	KSD526
2SC1061	HITACHI	KSD526
2SC1070	N.E.C	KSC1070
2SC1096	N.E.C	KSC1096
2SC1098A	N.E.C	KSD880
2SC1107	SANKEN	KSD526
2SC1108	SANKEN	KSD526
2SC1109	SANKEN	KSD526
2SC1110	SANKEN	KSD526

TYPE	MAKER	SAMSUNG
2SC1114	SANKEN	KSD5006
2SC1117	HITACHI	KSC1070
2SC1123	SONY	KSC1674
2SC1126	SONY	KSC1674
2SC1128	SONY	KSC1674
2SC1129	SONY	KSC1674
2SC1153	MITSUBISHI	KSD5004
2SC1154	MITSUBISHI	KSD5005
2SC1162	HITACHI	KSC1173
2SC1166	TOSHIBA	KSC2003
2SC1170	TOSHIBA	KSD5005
2SC1170B	TOSHIBA	KSD5005
2SC1171	TOSHIBA	KSD5004
2SC1172	TOSHIBA	KSD5006
2SC1172A	TOSHIBA	KSD5007
2SC1173	TOSHIBA	KSD288/C1173
2SC1174	HITACHI	KSD5005
2SC1175	SANYO	KSC945
2SC1187	N.E.C	KSC1187
2SC120	N.E.C	KSC945
2SC1204	HITACHI	KSC945
2SC1205	HITACHI	KSC1675
2SC1206	MITSUBISHI	KSD526
2SC1207	MITSUBISHI	KSD526
2SC1209	MITSUBISHI	KSC2001
2SC121	N.E.C	KSC945
2SC1210	MITSUBISHI	KSC2002
2SC1211	MITSUBISHI	KSC2003
2SC1212A	HITACHI	KSD794
2SC1213	HITACHI	KSC2001
2SC1213A	HITACHI	KSC2001
2SC1214	HITACHI	KSC2002
2SC1215	MATSUSHITA	KSC1395
2SC1219	FUJITSU	KSC2001
2SC122	N.E.C	KSC945
2SC1220	FUJITSU	KSC2002
2SC1226	MATSUSHITA	KSC1173/D882
2SC1226A	MATSUSHITA	KSC1173
2SC123	N.E.C	KSC945
2SC124	N.E.C	KSC945
2SC1240	MITSUBISHI	KSC1674
2SC1243	MITSUBISHI	KSD882
2SC1246	FUJITSU	KSC2001
2SC1247	FUJITSU	KSC2002
2SC125	SONY	KSC2310
2SC126	SONY	KSC2310
2SC1285	SANYO	KSC945
2SC1293	SANYO	KSC1674
2SC1308	SANYO	KSD5006
2SC1309	MITSUBISHI	KSD5005
2SC1310	MITSUBISHI	KSC945
2SC1311	MITSUBISHI	KSC945

TYPE	MAKER	SAMSUNG
2SC1316	SONY	KSD5004
2SC1317	MATSUSHITA	KSC2001
2SC1318	MATSUSHITA	KSC2002
2SC1319	N.E.C	KSC1187
2SC1320	N.E.C	KSC1187
2SC1325A	N.E.C	KSD5005
2SC1342	HITACHI	KSC1674
2SC1346	MATSUSHITA	KSC2001
2SC1358	N.E.C	KSD5005
2SC1359	MATSUSHITA	KSC1675
2SC1361	SONY	KSC945
2SC1362	SONY	KSC945
2SC1363	SONY	KSC945
2SC1364	SONY	KSC945
2SC1367	HITACHI	KSD5004
2SC1368	HITACHI	KSC1173
2SC1372	FUJITSU	KSC945
2SC1381	TOSHIBA	KSC2690
2SC1390	HITACHI	KSC1675
2SC1393	N.E.C	KSC1393
2SC1394	N.E.C	KSC1394
2SC1395	N.E.C	KSC1395
2SC1398	MATSUSHITA	KSD288
2SC1413	HITACHI	KSD5007
2SC1413A	HITACHI	KSD5007
2SC1417	HITACHI	KSC1674
2SC1419	HITACHI	KSD288
2SC1428	N.E.C	KSC838
2SC1429	SONY	KSC2500
2SC1438	FUJITSU	KSC2310
2SC1439	FUJITSU	KSC2310
2SC145	OKI	KSC815
2SC146	OKI	JSC845
2SC146A	OKI	KSC945
2SC1473	MATSUSHITA	MPSA43
2SC1474	SONY	KSC2500
2SC1507	N.E.C	KSC1507
2SC1515K	HITACHI	KSC2310
2SC1518	MATSUSHITA	KSC1173
2SC1520	N.E.C	KSC1520
2SC1537	ROHM	KSC838
2SC1539	ROHM	KSC945
2SC1540	ROHM	KSC945
2SC1541	ROHM	KSC945
2SC1542	ROHM	KSC945
2SC1544	ROHM	KSC945
2SC155	FUJITSU	KSC1675
2SC156	FUJITSU	KSC1675
2SC1568	MATSUSHITA	KSD882
2SC157	HITACHI	KSC945
2SC1570	SANYO	KSC945
2SC158	HITACHI	KSC945

TYPE	MAKER	SAMSUNG
2SC1599	TOSHIBA	KSC945
2SC160	HITACHI	KSC945
2SC1602	J.R.C	KSC945
2SC1621	N.E.C	KSC1623
2SC1622	N.E.C	KSC1623
2SC1623	N.E.C	KSC1623
2SC1627	TOSHIBA	KSC2003
2SC1631	SONY	KSC945
2SC1632	SONY	KSC945
2SC1633	SONY	KSC945
2SC1634	SONY	KSC945
2SC1639	ROHM	KSC945
2SC1640	ROHM	KSC945
2SC1641	ROHM	KSC945
2SC1642	ROHM	KSC945
2SC1643	ROHM	KSC945
2SC1644	ROHM	KSC945
2SC1647	ROHM	KSC945
2SC1648	ROHM	KSC945
2SC1652	ROHM	KSC1008
2SC1653	N.E.C	KSC1653
2SC1654	N.E.C	KSC1653
2SC1670	SONY	KSC2316
2SC1674	N.E.C	KSC1674
2SC1675	N.E.C	KSC1675
2SC1683	MATSUSHITA	KSD401
2SC1684	MATSUSHITA	KSC945
2SC1685	MATSUSHITA	KSC945
2SC1686	MATSUSHITA	KSC1675
2SC1687	MATSUSHITA	KSC1674
2SC1688	MATSUSHITA	KSC1674
2SC170	FUJITSU	KSC945
2SC1708	MITSUBISHI	KSC1845
2SC171	FUJITSU	KSC945
2SC172	FUJITSU	KSC945
2SC1727	SONY	KSC1393
2SC1730	N.E.C	KSC1730
2SC1739	ROHM	KSC1675
2SC174	FUJITSU	KSC945
2SC1766	HITACHI	KSC945
2SC1771	J.R.C	KSC945
2SC1775	HITACHI	KSC1845
2SC1776	FUJITSU	KSC2002
2SC1778	MATSUSHITA	KSC1674
2SC1779	MATSUSHITA	KSC1674
2SC1787	MATSUSHITA	KSC2784
2SC1788	MATSUSHITA	KSC2001
2SC1788A	MATSUSHITA	KSC2001
2SC1799	SANYO	KSC2073
2SC1811	SONY	KSC2310
2SC1812	SONY	KSC1070
2SC1815	TOSHIBA	KSC945

TYPE	MAKER	SAMSUNG
2SC182	N.E.C	KSC945
2SC1826	SANKEN	KSD526
2SC183	N.E.C	KSC945
2SC183A	N.E.C	KSC945
2SC184	N.E.C	KSC945
2SC1842	N.E.C	KSC945
2SC1843	N.E.C	KSC945
2SC1845	N.E.C	KSC1845
2SC1847	MATSUSHITA	KSD794
2SC1849	MATSUSHITA	KSC945
2SC1850	MATSUSHITA	KSC945
2SC1851	MATSUSHITA	KSC2001
2SC1852	MATSUSHITA	KSC2002
2SC1853	MATSUSHITA	KSC1675
2SC1854	MATSUSHITA	KSC1675
2SC1855	HITACHI	KSC1393
2SC1856	HITACHI	KSC1393
2SC1859	SONY	KSC2328A
2SC186	FUJITSU	KSC945
2SC187	FUJITSU	KSC945
2SC1875	N.E.C	KSD5005
2SC1881	HITACHI	KSD560
2SC1883	HITACHI	KSD560
2SC1885	MATSUSHITA	KSC2310
2SC1886	HITACHI	KSC1730
2SC1887	HITACHI	KSC1730
2SC1890	HITACHI	KSC1845
2SC1892	TOSHIBA	KSD5004
2SC1893	TOSHIBA	KSD5005
2SC1894	TOSHIBA	KSD5006
2SC1895	TOSHIBA	KSD5007
2SC1898	J.R.C	KSC1393
2SC1899	J.R.C	KSC1393
2SC1903	FUJITSU	KSC2682
2SC1904	FUJITSU	KSC2682
2SC1906	HITACHI	KSC1730
2SC1907	HITACHI	KSC1730
2SC1908	SONY	KSC838
2SC191	SONY	KSC945
2SC1913	MATSUSHITA	KSD401
2SC1915	MITSUBISHI	KSC2310
2SC192	SONY	KSC945
2SC1921	HITACHI	KSC2310
2SC1922	HITACHI	KSD5004
2SC1923	TOSHIBA	KSC1674
2SC1928	SONY	KSC945
2SC193	SONY	KSC945
2SC194	SONY	KSC945
2SC1940	N.E.C	KSC2310
2SC1941	N.E.C	KSC2310
2SC1942	HITACHI	KSD5005
2SC195	SONY	KSC945

TYPE	MAKER	SAMSUNG
2SC1951	SONY	KSC2310
2SC1954	FUJITSU	KSC1730
2SC196	SONY	KSC945
2SC1961	SONY	KSC1674
2SC197	SONY	KSC945
2SC1980	MATSUSHITA	KSC1845
2SC1982	SONY	KSC2310
2SC1983	SANKEN	KSC1983
2SC1989	MATSUSHITA	KSC1675
2SC1990	MATSUSHITA	KSC1674
2SC1992	N.E.C	KSC945
2SC1993	N.E.C	KSC945
2SC1998	N.E.C	KSC2310
2SC1999	N.E.C	KSC2310
2SC2000	N.E.C	KSC945
2SC2001	N.E.C	KSC2001
2SC2002	N.E.C	KSC2002
2SC2003	N.E.C	KSC2003
2SC2009	SONY	KSC1674
2SC2010	SONY	KSC1674
2SC2011	SONY	KSC1393
2SC2013	SONY	KSC1393
2SC2022	SANKEN	KSC2333
2SC2023	SANKEN	KSC2333
2SC2027	HITACHI	KSD5006
2SC2057	SANYO	KSC1393
2SC2059	ROHM	KSC2223
2SC206	FUJITSU	KSC945
2SC207	FUJITSU	KSC945
2SC2072	SONY	KSC945
2SC2073	TOSHIBA	KSD401
2SC2076	MATSUSHITA	KSC838
2SC2078	SANYO	KSD880
2SC2088	TOSHIBA	KSC1845
2SC2089	TOSHIBA	KSC1845
2SC2120	TOSHIBA	KSC2001
2SC2130	MITSUBISHI	KSC945
2SC2141	SONY	KSC2073
2SC2153	MATSUSHITA	KSC2786
2SC2166	MITSUBISHI	KSD526
2SC2167	SANKEN	KSD401
2SC2168	SANKEN	KSD401
2SC2193	OKI	KSC2073
2SC22	N.E.C	KSD526
2SC2206	MATSUSHITA	KSC838
2SC2209	MATSUSHITA	KSD794
2SC2212	SONY	KSC1674
2SC2215	TOSHIBA	KSC1674
2SC2216	TOSHIBA	KSC1674
2SC2223	N.E.C	KSC2223
2SC2228	SANYO	KSC2310
2SC2229	TOSHIBA	KSC2310

TYPE	MAKER	SAMSUNG
2SC2235	TOSHIBA	KSC2316
2SC2239	TOSHIBA	KSD401
2SC2240	TOSHIBA	KSC1845
2SC2257	MATSUSHITA	KSC2310
2SC2257A	MATSUSHITA	KSC2682
2SC2259	N.E.C	KSC1845
2SC2263	MATSUSHITA	KSC945
2SC2274	SANYO	KSC2002
2SC2274	SANYO	SS8050
2SC2275	N.E.C	KSC2073
2SC2277	HITACHI	KSC2002
2SC2294	MATSUSHITA	KSC1675
2SC2296	MITSUBISHI	KSC1675
2SC2298	HITACHI	KSD985
2SC2299	FUJITSU	KSD471
2SC23	N.E.C	KSD526
2SC2308	HITACHI	KSC945
2SC2309	HITACHI	KSC945
2SC2310	HITACHI	KSC945
2SC2314	SANYO	KSD794
2SC2314	SANYO	KSC2690
2SC2320	MITSUBISHI	KSC945
2SC2324	HITACHI	KSD985
2SC2333	N.E.C	KSC2333
2SC2334	N.E.C	KSC2334
2SC2335	N.E.C	KSC2335
2SC2348	TOSHIBA	KSC1393
2SC2362	SANYO	KSC1845
2SC2363	SANYO	KSC2310
2SC2376	TOSHIBA	KSC2688
2SC2383	TOSHIBA	KSC2383
2SC2396	HITACHI	KSC945
2SC24	N.E.C	KSD526
2SC2404	MATSUSHITA	KSC2223
2SC2412	ROHM	KSC1623
2SC2438	FUJI	KSC2334
2SC2439	FUJI	KSC2334
2SC2440	FUJI	KSC2335
2SC2441	SANYO	KSC2310
2SC2458	TOSHIBA	KSC2785
2SC2459	TOSHIBA	KSC2784
2SC2462	HITACHI	KSC1623
2SC2463	HITACHI	KSC1623
2SC2464	HITACHI	KSC1070
2SC2466	HITACHI	KSC1070
2SC2481	TOSHIBA	KSC2690A
2SC2497	MATSUSHITA	KSD794A
2SC250	FUJITSU	KSC838
2SC2500	TOSHIBA	KSC2500
2SC2501	J.R.C	KSC2335
2SC2502	J.R.C	KSC2335
2SC2517	N.E.C	KSC2517

TYPE	MAKER	SAMSUNG
2SC2518	N.E.C	KSC2518
2SC2534	TOSHIBA	KSC2333
2SC2535	TOSHIBA	KSC2335
2SC2542	FUJI	KSC2335
2SC2543	HITACHI	KSC1845
2SC2544	HITACHI	KSC1845
2SC2552	TOSHIBA	KSC2333
2SC2553	TOSHIBA	KSC2335
2SC2555	TOSHIBA	KSC2749
2SC2556	MATSUSHITA	KSC2690
2SC2561	MATSUSHITA	KSC1675
2SC2582	MATSUSHITA	KSD794
2SC2590	MATSUSHITA	KSC2690
2SC2612	HITACHI	KSC5020
2SC2612	HITACHI	KSC2335
2SC2613	HITACHI	KSC5021
2SC2613	HITACHI	KSC2335
2SC2619	HITACHI	KSC1623
2SC2620	HITACHI	KSC2223
2SC2621	SANYO	KSC2688
2SC263	OKI	KSC945
2SC2646	MATSUSHITA	KSC1730
2SC265	OKI	KSC945
2SC266	N.E.C	KSC838
2SC2660A	MATSUSHITA	KSC2073
2SC2668	TOSHIBA	KSC2786
2SC2669	TOSHIBA	KSC2787
2SC2673	ROHM	KSD1616
2SC268	N.E.C	KSC945
2SC2680	MATSUSHITA	KSC2223
2SC2682	N.E.C	KSC2682
2SC2688	N.E.C	KSC2688
2SC2690	N.E.C	KSC2690
2SC2690A	N.E.C	KSC2690A
2SC2691	MITSUBISHI	KSC945
2SC2699	TOSHIBA	KSC2699
2SC2704	TOSHIBA	KSC2682
2SC2710	TOSHIBA	KSC2710
2SC2712	TOSHIBA	KSC1623
2SC2714	TOSHIBA	KSC2223
2SC2715	TOSHIBA	KSC2715
2SC2717	TOSHIBA	KSC1675
2SC2718	N.E.C	KSC945
2SC2724	MITSUBISHI	KSC2787
2SC273	N.E.C	KSC2310
2SC2732	HITACHI	KSC3121
2SC2733	HITACHI	KSC3123
2SC2734	HITACHI	KSC3120
2SC2736	HITACHI	KSC3120
2SC2749	N.E.C	KSC2749
2SC2751	N.E.C	KSC2751
2SC2752	N.E.C	KSC2752

TYPE	MAKER	SAMSUNG
2SC2755	N.E.C	KSC2755
2SC2756	N.E.C	KSC2756
2SC2757	N.E.C	KSC2757
2SC2758	N.E.C	KSC2758
2SC2759	N.E.C	KSC2759
2SC2784	N.E.C	KSC2784
2SC2785	N.E.C	KSC2785
2SC2786	N.E.C	KSC2786
2SC2787	N.E.C	KSC2787
2SC2794	TOSHIBA	KSD794A
2SC28	FUJITSU	KSC945
2SC2803	MATSUSHITA	KSC2690A
2SC281	GUTACGU	JSC945
2SC2810	SANKEN	KSC2335
2SC2812	SANYO	KSC1623
2SC2813	SANYO	KSC2223
2SC2816	HITACHI	KSC2335
2SC2821	HITACHI	KSC2715
2SC2824	TOSHIBA	KSC2690
2SC2826	J.R.C	KSC2335
2SC2827	J.R.C	KSC2335
2SC2828	J.R.C	KSC2751
2SC283	HITACHI	KSC945
2SC2839	SANYO	KSC2787
2SC284	HITACHI	KSC945
2SC2840	SANYO	KSC2786
2SC2855	HITACHI	KSC1845
2SC2856	HITACHI	KSC1845
2SC2859	TOSHIBA	KSC2859
2SC2860	MATSUSHITA	KSC2786
2SC2868	TOSHIBA	KSC2003
2SC2872	ROHM	KSC2001
2SC2877	TOSHIBA	KSD794
2SC287A	N.E.C	KSC388
2SC2882	TOSHIBA	KSC2882
2SC288A	N.E.C	KSC388
2SC29	FUJITSU	KSC945
2SC2907	FUJI	KSC2518
2SC2911	SANYO	KSC2682
2SC2912	SANYO	KSC2682
2SC2929	FUJI	KSC2518
2SC2934	HITACHI	KSC2688
2SC2935	HITACHI	KSC2688
2SC2943	SONY	KSC2751
2SC296	FUJITSU	KSC945
2SC2963	J.R.C	KSC2517
2SC2979	HITACHI	KSC5027
2SC2986	TOSHIBA	KSC945
2SC2999	SANYO	KSC2786
2SC3000	SANYO	KSC1675
2SC3038	SANYO	KSC2518
2SC3039	SANYO	KSC2335

TYPE	MAKER	SAMSUNG
2SC3042	SANYO	KSC2751
2SC3052	MITSUBISHI	KSC1623
2SC3055	FUJITSU	KSC2333
2SC3056	FUJITSU	KSC2335
2SC3068	SANYO	KSC945
2SC3114	SANYO	KSC2002
2SC3120	TOSHIBA	KSC3120
2SC3121	TOSHIBA	KSC3121
2SC3122	TOSHIBA	KSC2223
2SC3123	TOSHIBA	KSC3123
2SC3125	TOSHIBA	KSC3125
2SC3133	MITSUBISHI	KSD568
2SC3134	SANYO	KSC1623
2SC3142	SANYO	KSC2223
2SC316	MATSUSHITA	KSC945
2SC3192	K.E.C	KSC1675
2SC3193	K.E.C	KSC2787
2SC194	K.E.C	KSC1674
2SC3195	K.E.C	KSC2785
2SC3197	K.E.C	KSC1674
2SC3198	K.E.C	KSC945
2SC3199	K.E.C	KSC2785
2SC3200	K.E.C	KSC1845
2SC3201	K.E.C	KSC2784
2SC3204	K.E.C	KSD1020
2SC3206	K.E.C	KSC2310
2SC3226	K.E.C	KSC2500
2SC3228	K.E.C	KSC2383
2SC3230	K.E.C	KSC1173
2SC3231	K.E.C	KSC2233
2SC324	FUJITSU	KSC945
2SC3242	MITSUBISHI	KSC2500
2SC3242A	MITSUBISHI	KSC2500
2SC3252	SANYO	KSD880
2SC3254	SANYO	KSD569
2SC3258	TOSHIBA	KSC2517
2SC3265	TOSHIBA	KSC3265
2SC33	N.E.C	KSC945
2SC3300	N.E.C	KSC5047
2SC3311	MATSUSHITA	KSC2785
2SC3312	MATSUSHITA	KSC2784
2SC3313	MATSUSHITA	KSC2787
2SC3314	MATSUSHITA	KSC2787
2SC3315	MATSUSHITA	KSC2786
2SC3330	SANYO	KSC2785
2SC3331	SANYO	KSC2002
2SC3332	SANYO	KSC2383
2SC3336	HITACHI	KSC5025
2SC3339	TOSHIBA	KSC1623
2SC3342	HITACHI	KSD5006
2SC3343	HITACHI	KSD5006
2SC3359	ROHM	KSC2003
2SC3361	SANYO	KSC2712

TYPE	MAKER	SAMSUNG
2SC3365	HITACHI	KSC5024
2SC337	OKI	KSC838
2SC3374	HITACHI	KSC2233
2SC3375	TOSHIBA	KSC2001
2SC3377	ROHM	KSC2001
2SC3378	TOSHIBA	KSC2784
2SC338	OKI	KSC945
2SC3382	SANYO	KSC2002
2SC3383	SANYO	KSC2002
2SC3384	TOSHIBA	KSC2751
2SC3390	HITACHI	KSC2785
2SC3391	HITACHI	KSC2786
2SC3395	SANYO	KSR1104
2SC3396	SANYO	KSR1103
2SC3397	SANYO	KSR1108
2SC3398	SANYO	KSR1102
2SC3399	SANYO	KSR1204
2SC340	OKI	KSC945
2SC3400	SANYO	KSR1203
2SC3401	SANYO	KSR1208
2SC3402	SANYO	KSR1202
2SC3413	HITACHI	KSC2785
2SC3414	HITACHI	KSC2002
2SC3416	SANYO	KSC2682
2SC3417	SANYO	KSC2688
2SC3418	SANYO	KSC2752
2SC342	OKI	KSC2310
2SC3421	TOSHIBA	KSC2690
2SC3422	TOSHIBA	KSD882
2SC3423	TOSHIBA	KSC2682
2SC3424	TOSHIBA	KSC2688
2SC3425	TOSHIBA	KSC2752
2SC3440	MITSUBISHI	KSC3265
2SC3442	MITSUBISHI	KSC2785
2SC3446	SANYO	KSC5020
2SC3447	SANYO	KSC5021
2SC3448	SANYO	KSC5022
2SC3449	SANYO	KSC5023
2SC3450	SANYO	KSC5024
2SC3451	SANYO	KSC5025
2SC3456	SANYO	KSC5026
2SC3457	SANYO	KSC5027
2SC3458	SANYO	KSC5028
2SC3459	SANYO	KSC5029
2SC3470	HITACHI	KSC2785
2SC3471	HITACHI	KSC2002
2SC3481	SANYO	KSD5002
2SC3482	SANYO	KSD5003
2SC3485	SANYO	KSD5006
2SC3486	SANYO	KSD5007
2SC3487	TOSHIBA	KSC945
2SC3488	TOSHIBA	KSD1020
2SC3494	HITACHI	KSC2785

TYPE	MAKER	SAMSUNG
2SC3495	SANYO	KSC1845
2SC350	HITACHI	KSC945
2SC3502	SANYO	KSC3502
2SC3503	SANYO	KSC2258
2SC351	TOSHIBA	KSC1730
2SC3521	HITACHI	KSC2712
2SC3522	T.D.K	KSC2335
2SC3523	T.D.K	KSC2517
2SC3524	T.D.K	KSC2334
2SC3527	MATSUSHITA	KSC2751
2SC3552	SANYO	KSC3552
2SC36	MATSUSHITA	KSC945
2SC361	TOSHIBA	KSC945
2SC3617	N.E.C	KSC2500
2SC362	TOSHIBA	KSC945
2SC3624	N.E.C	KSC5037
2SC3625	TOSHIBA	KSC2335
2SC363	TOSHIBA	KSC945
2SC364	TOSHIBA	KSC945
2SC3653	SANYO	KSR1004
2SC3654	SANYO	KSR1003
2SC3655	SANYO	KSR1008
2SC3656	SANYO	KSR1002
2SC3658	HITACHI	KSD5002
2SC3659	HITACHI	KSD5002
2SC366	TOSHIBA	KSC2002
2SC367	TOSHIBA	KSC2002
2SC369	TOSHIBA	KSC945
2SC37	N.E.C	KSC945
2SC370	TOSHIBA	KSC945
2SC3705	SANYO	KSD985
2SC371	TOSHIBA	KSC945
2SC3711	TOSHIBA	KSC2785
2SC372	TOSHIBA	KSC945
2SC3723	FUJI	KSC2518
2SC373	TOSHIBA	KSC945
2SC374	TOSHIBA	KSC945
2SC3742	N.E.C	KSC3265
2SC375	TOSHIBA	KSC1674
2SC377	TOSHIBA	KSC1675
2SC3771	SANYO	KSC2759
2SC378	TOSHIBA	KSC1675
2SC3784	SANYO	KSD985
2SC3786	SANYO	KSD985
2SC3788	SANYO	KSC2682
2SC3789	SANYO	KSC2688
2SC379	TOSHIBA	KSC1675
2SC380	TOSHIBA	KSC838
2SC3801	ROHM	KSC1730
2SC3802	ROHM	KSC2757
2SC381	TOSHIBA	KSC1675
2SC382	TOSHIBA	KSC1187
2SC3823	HITACHI	KSC2517
2SC3825	MATSUSHITA	KSC2333

TYPE	MAKER	SAMSUNG
2SC3826	N.E.C	KSC2517
2SC383	TOSHIBA	KSC1674
2SC3830	SANKEN	KSC2335
2SC3832	SANKEN	KSC2335
2SC3834	SANKEN	KSC2334
2SC384	TOSHIBA	KSC1674
2SC3848	ROHM	KSC2859
2SC385	TOSHIBA	KSC1674
2SC3859	SANYO	KSR1110
2SC386	TOSHIBA	KSC1674
2SC3860	SANYO	KSR1210
2SC3875	K.E.C	KSC2712
2SC3876	K.E.C	KSC2859
2SC3879	K.E.C	KSC2715
2SC388	TOSHIBA	KSC1674
2SC3881	K.E.C	KSC3125
2SC388A	TOSHIBA	KSC388
2SC3898	SANYO	KSR1112
2SC3899	SANYO	KSR1212
2SC3900	SANYO	KSR1109
2SC3901	SANYO	KSR1209
2SC3928	MITSUBISHI	KSC1623
2SC394	TOSHIBA	KSC1675
2SC3960	UNISON	KSC2517
2SC3961	UNISON	KSC2518
2SC3962	UNISON	KSC2518
2SC3968	ROHM	KSC 2333
2SC398	TOSHIBA	KSC1393
2SC3984	ROHM	KSC945
2SC399	TOSHIBA	KSC1394
2SC4007	ROHM	KSD526
2SC401	SONY	KSC945
2SC4018	ROHM	KSC1623
2SC402	SONY	KSC945
2SC4027	SANYO	KSC2690A
2SC402A	SONY	KSC945
2SC403	SONY	KSC945
2SC403A	SONY	KSC945
2SC404	SONY	KSC945
2SC4047	SANYO	KSR1105
2SC4048	SANYO	KSR1205
2SC4120	SANYO	KSR1111
2SC4121	SANYO	KSR1211
2SC4143	SANYO	KSR1214
2SC4146	SANYO	KSR1114
2SC454	HITACHI	KSC838
2SC455	HITACHI	KSC838
2SC458	HITACHI	KSC945
2SC459	HITACHI	KSC1675
2SC460	HITACHI	KSC1675
2SC461	HITACHI	KSC1675
2SC462	HITACHI	KSC1393

TYPE	MAKER	SAMSUNG
2SC463	HITACHI	KSC1394
2SC464	HITACHI	KSC1393
2SC465	HITACHI	KSC1393
2SC466	HITACHI	KSC1393
2SC467	FUJITSU	KSC945
2SC469	N.E.C	KSC838
2SC470	SONY	KSC2310
2SC471	HITACHI	KSC945
2SC475	N.E.C	KSC945
2SC476	N.E.C	KSC945
2SC489	TOSHIBA	KSD526
2SC490	TOSHIBA	KSD526
2SC491	TOSHIBA	KSD526
2SC492	TOSHIBA	KSD526
2SC493	TOSHIBA	KSD526
2SC494	TOSHIBA	KSD526
2SC509	TOSHIBA	KSC2001
2SC528	HITACHI	KSC945
2SC529	HITACHI	KSC1675
2SC530	HITACHI	KSC1675
2SC531	HITACHI	KSC1675
2SC532	HITACHI	KSC1675
2SC533	HITACHI	KSC1675
2SC534	HITACHI	KSC1675
2SC535	HITACHI	KSC1675
2SC536	SANYO	KSC945
2SC537	SANYO	KSC945
2SC538	MATSUSHITA	KSC945
2SC538A	MATSUSHITA	KSC945
2SC539	MATSUSHITA	KSC945
2SC54	FUJITSU	KSC945
2SC540	N.E.C	KSC945
2SC544	SANYO	KSC1674
2SC545	SANYO	KSC1674
2SC546	SANYO	KSC1187
2SC56	FUJITSU	KSC945
2SC561	FUJITSU	KSC1675
2SC562	MATSUSHITA	KSC1187
2SC581	MATSUSHITA	KSC1675
2SC593	MATSUSHITA	KSC838
2SC620	MITSUBISHI	KSC2002
2SC621	MITSUBISHI	KSC838
2SC622	MITSUBISHI	KSC838
2SC627	FUJITSU	KSC2310
2SC629	SONY	KSC1730
2SC631	SONY	KSC838
2SC632	SONY	KSC945
2SC633	SONY	KSC838
2SC634	SONY	KSC945
2SC640	N.E.C	KSC945
2SC642	TOSHIBA	KSD5004
2SC642A	TOSHIBA	KSD5004

TYPE	MAKER	SAMSUNG
2SC643	TOSHIBA	KSD5004
2SC643A	TOSHIBA	KSD5004
2SC645	MATSUSHITA	KSC1675
2SC648	HITACHI	KSC945
2SC649	HITACHI	KSC945
2SC65	SANYO	KSC2310
2SC650	HITACHI	KSC945
2SC655	MATSUSHITA	KSC945
2SC66	SANYO	KSC2310
2SC660	MITSUBISHI	KSC1187
2SC661	MITSUBISHI	KSC1187
2SC663	MITSUBISHI	KSC1674
2SC668	SANYO	KSC2786
2SC674	SANYO	KSC2786
2SC684	HITACHI	KSC1730
2SC693	SANYO	KSC945
2SC705	SANYO	KSC1674
2SC706	SANYO	KSC1674
2SC707	HITACHI	KSC1070
2SC709	MITSUBISHI	KSC1675
2SC710	MITSUBISHI	KSC1675
2SC711	MITSUBISHI	KSC945
2SC712	MITSUBISHI	KSC945
2SC714	MITSUBISHI	KSC945
2SC715	SANYO	KSC945
2SC716	SANYO	KSC945
2SC720	FUJITSU	KSC1187
2SC721	FUJITSU	KSC1187
2SC733	TOSHIBA	KSC945
2SC734	TOSHIBA	KSC945
2SC735	TOSHIBA	KSC2001
2SC738	MITSUBISHI	KSC1674
2SC739	MITSUBISHI	KSC1674
2SC752	TOSHIBA	KSC945
2SC755	N.E.C	KSC945
2SC761	MATSUSHITA	KSC1070
2SC762	MATSUSHITA	KSC1070
2SC763	MITSUBISHI	KSC1674
2SC772	SANYO	KSC1675
2SC773	MITSUBISHI	KSC2002
2SC784	TOSHIBA	KSC1187
2SC785	TOSHIBA	KSC1187
2SC787	TOSHIBA	KSC1070
2SC789	TOSHIBA	KSD526/D288
2SC790	TOSHIBA	KSD288
2SC791	TOSHIBA	KSD526
2SC815	N.E.C	KSC838
2SC817	MITSUBISHI	KSC1070
2SC818	MITSUBISHI	KSC2310
2SC828	MATSUSHITA	KSC945
2SC828A	MATSUSHITA	KSC945
2SC829	MATSUSHITA	KSC838

TYPE	MAKER	SAMSUNG
2SC830	HITACHI	KSD526
2SC836	N.E.C	KSC1187
2SC837	N.E.C	KSC388
2SC838	N.E.C	KSC838
2SC839	N.E.C	KSC838
2SC860	SANYO	KSC1674
2SC870	MITSUBISHI	KSC945
2SC894	SONY	KSC1675
2SC899	N.E.C	KSC945
2SC900	N.E.C	KSC945
2SC903	MITSUBISHI	KSC2001
2SC904	MITSUBISHI	KSC2002
2SC905	MITSUBISHI	KSC2002
2SC912	MITSUBISHI	KSC945
2SC917	HITACHI	KSC1070
2SC918	SONY	KSC1674
2SC923	N.E.C	KSC838
2SC924	N.E.C	KSC838
2SC927	SANYO	KSC1674
2SC928	SANYO	KSC1674
2SC929	SANYO	KSC1675
2SC930	SANYO	KSC1675
2SC931	SANYO	KSD526/D882
2SC932	SANYO	KSD882
2SC937	HITACHI	KSD5004
2SC945	N.E.C	KSC945
2SC949	J.R.C	KSC945
2SC950	J.R.C	KSC945
2SC951	J.R.C	KSC945
2SC953	J.R.C	KSC2001
2SC955	J.R.C	KSC1675
2SC956	J.R.C	KSC945
2SC957	SONY	KSC1674
2SC963	FUJITSU	KSC838
2SC969	FUJITSU	KSC945
2SC983	TOSHIBA	KSC2310
2SD100A	TOSHIBA	KSC945
2SD1012	SANYO	KSC1072
2SD1020	N.E.C	KSD1020
2SD1022	J.R.C	KSD560
2SD1029	SANYO	KSD526
2SD1048	SANYO	KSC3265
2SD1052	TOSHIBA	KSD560
2SD1069	TOSHIBA	KSC2335
2SD1101	HITACHI	KSC3265
2SD1128	FUJITSU	KSD560
2SD1131	HITACHI	KSD526
2SD1132	HITACHI	KSD526
2SD1133	HITACHI	KSD526
2SD1134	HITACHI	KSD526
2SD1135	HITACHI	KSD526
2SD1138	HITACHI	KSC2328A

TYPE	MAKER	SAMSUNG
2SD1139	HITACHI	KSC2328A
2SD1147	FUJI	KSD560
2SD1157	FUJI	KSD526
2SD1161	SANYO	KSC2712
2SD1163A	HITACHI	KSD560
2SD1173	MATSUSHITA	KSD5003
2SD1179	HITACHI	KSC2690
2SD1180	HITACHI	KSC2690
2SD1190	SANYO	KSD560
2SD1195	SANYO	KSD560
2SD1201	HITACHI	KSC1871
2SD1202	HITACHI	KSC1871
2SD1218	MATSUSHITA	KSD560
2SD122	HITACHI	KSD526
2SD1225M	ROHM	KSD882
2SD124	HITACHI	KSD73
2SD1247	SANYO	KSC2500
2SD124A	HITACHI	KSD73
2SD125	HITACHI	KSD73
2SD125A	HITACHI	KSD73
2SD1290	MATSUSHITA	KSD5001
2SD1300	HITACHI	KSD5005
2SD1301	MATSUSHITA	KSD5000
2SD1304	MATSUSHITA	KSC1623
2SD1306	HITACHI	KSC3265
2SD1328	MATSUSHITA	KSC3265
2SD1337	SANYO	KSD5004
2SD1338	SANYO	KSD5000
2SD1339	SANYO	KSD5005
2SD1340	SANYO	KSD5001
2SD1341	SANYO	KSD5006
2SD1342	SANYO	KSD5002
2SD1343	SANYO	KSD5007
2SD1344	SANYO	KSD5003
2SD1351	K.E.C	KSD880
2SD1352	K.E.C	KSD526
2SD1353	TOSHIBA	KSD288
2SD1354	TOSHIBA	KSD288
2SD1357	TOSHIBA	KSD2334
2SD1358	TOSHIBA	KSD569
2SD1359	TOSHIBA	KSD568
2SD1362	TOSHIBA	KSD1221
2SD1363	TOSHIBA	KSD569
2SD1369	TOSHIBA	KSD288
2SD1370	TOSHIBA	KSC2517
2SD1377	HITACHI	KSD986
2SD1381	ROHM	KSC2690
2SD1387	SANYO	KSC2500
2SD1388	SANYO	KSD1616
2SD1389	SANKEN	KSD5005
2SD1396	SANYO	KSD5000
2SD1397	SANYO	KSD5001

TYPE	MAKER	SAMSUNG
2SD1398	SANYO	KSD5002
2SD1399	SANYO	KSD5003
2SD1400	SANYO	KSD5004
2SD1401	SANYO	KSD5005
2SD1402	SANYO	KSD5006
2SD1403	SANYO	KSD5007
2SD141	N.E.C	KSD880
2SD1410A	HITACHI	KSD401
2SD142	N.E.C	KSD880
2SD1423	MATSUSHITA	KSD1020
2SD1424	MATSUSHITA	KSC2785
2SD1429	TOSHIBA	KSD5004
2SD143	N.E.C	KSD880
2SD1430	TOSHIBA	KSD5005
2SD1431	TOSHIBA	KSD5006
2SD1432	TOSHIBA	KSD5007
2SD1438	TOSHIBA	KSD794A
2SD144	N.E.C	KSD880
2SD1447	MITSUBISHI	KSD471A
2SD1449	MATSUSHITA	KSC2784
2SD1452	HITACHI	KSD5004
2SD1453	HITACHI	KSD5005
2SD1455	HITACHI	KSD5006
2SD1456	HITACHI	KSD5007
2SD146	FUJITSU	KSD880
2SD1468	ROHM	KSC2001
2SD1469	ROHM	KSC2001
2SD147	FUJITSU	KSD880
2SD148	FUJITSU	KSD880
2SD1482	MATSUSHITA	KSC1623
2SD1490	HITACHI	KSD1616
2SD1493	HITACHI	KSD5004
2SD1494	HITACHI	KSD5005
2SD1496	HITACHI	KSD5006
2SD1497	HITACHI	KSD5007
2SD150	N.E.C	KSD880
2SD1506	ROHM	KSD794A
2SD1509	TOSHIBA	KSD794A
2SD1512	MATSUSHITA	KSC2784
2SD1517A	HITACHI	KSD794
2SD152	N.E.C	KSD526
2SD1521	HITACHI	KSD985
2SD1528	MATSUSHITA	KSC2233
2SD1531	MATSUSHITA	KSD794
2SD154	N.E.C	KSD526
2SD1543	TOSHIBA	KSD5014
2SD1544	TOSHIBA	KSD5015
2SD1545	TOSHIBA	KSD5016
2SD1546	TOSHIBA	KSD5017
2SD155	N.E.C	KSD526
2SD1553	TOSHIBA	KSD5010
2SD1554	TOSHIBA	KSD5011

TYPE	MAKER	SAMSUNG
2SD1555	TOSHIBA	KSD5012
2SD1556	TOSHIBA	KSD5013
2SD1567	N.E.C	KSD880
2SD1569	N.E.C	KSD880
2SD1572	HITACHI	KSD560
2SD1600	HITACHI	KSD560
2SD1608	MATSUSHITA	KSD560
2SD1616	N.E.C	KSD1616
2SD1616A	N.E.C	KSD1616A
2SD1646	ROHM	KSD560
2SD1647	ROHM	KSD560
2SD1649	SANYO	KSD5010
2SD1650	SANYO	KSD5011
2SD1651	SANYO	KSD5012
2SD1652	SANYO	KSD5013
2SD1653	SANYO	KSD5014
2SD1654	SANYO	KSD5015
2SD1655	SANYO	KSD5016
2SD1656	SANYO	KSD5017
2SD1658	TOSHIBA	KSD985
2SD1678	SANYO	KSD5010
2SD1682	SANYO	KSD794A
2SD1684	SANYO	KSC2690
2SD1691	N.E.C	KSD1691
2SD1692	N.E.C	KSD1692
2SD174F	FUJITSU	KSD73
2SD1757	ROHM	KSC2859
2SD1770	SANKEN	KSD401
2SD1771	SANKEN	KSC2690A
2SD1778	ROHM	KSD526
2SD1807	MATSUSHITA	KSC2785
2SD1812	ROHM	KSC2383
2SD1864	ROHM	KSD794
2SD1867	ROHM	KSD986
2SD1877	SANYO	KSD5011
2SD1878	SANYO	KSD5056
2SD1879	SANYO	KSD5057
2SD1882	SANYO	KSD5014
2SD1883	SANYO	KSD5015
2SD1884	SANYO	KSD5058
2SD1885	SANYO	KSD5059
2SD1888	ROHM	KSD560
2SD1902	SANYO	KSD880
2SD1912	SANYO	KSD880
2SD1918	ROHM	KSC2690A
2SD199	MATSUSHITA	KSD5004
2SD200	MATSUSHITA	KSD5004
2SD234	TOSHIBA	KSD880
2SD235	TOSHIBA	KSD880
2SD241	SANKEN	KSD362
2SD242	SANKEN	KSD362
2SD243	SANKEN	KSD362

TYPE	MAKER	SAMSUNG
2SD244	SANKEN	KSD362
2SD246	MATSUSHITA	KSD5006
2SD254	N.E.C	KSD880
2SD255	N.E.C	KSD880
2SD256	SANKEN	KSD880
2SD288	N.E.C	KSD880
2SD289	N.E.C	KSD880
2SD291	SONY	KSD880
2SD292	SONY	KSD880
2SD299	MATSUSHITA	KSD5006
2SD300	MATSUSHITA	KSD5006
2SD312	MATSUSHITA	KSD5004
2SD313	SANYO	KSD526
2SD314	SANYO	KSD526
2SD315	SANYO	KSD526
2SD317	MATSUSHITA	KSD526
2SD317A	MATSUSHITA	KSD526
2SD318	MATSUSHITA	KSD526
2SD318A	MATSUSHITA	KSD526
2SD325	SANYO	KSD288
2SD342	SONY	KSD880
2SD343	SONY	KSD880
2SD344	SONY	KSD880
2SD345	SONY	KSD880
2SD346	SONY	KSD526
2SD347	SONY	KSD526
2SD349	N.E.C	KSC945
2SD355	MITSUBISHI	KSC2001
2SD358	MITSUBISHI	KSD401
2SD359	MITSUBISHI	KSD880
2SD360	MITSUBISHI	KSD880
2SD361	MITSUBISHI	KSD880
2SD365	MATSUSHITA	KSD880
2SD365A	MATSUSHITA	KSD526
2SD366	MATSUSHITA	KSD880
2SD368	SANYO	KSD5006
2SD380	MATSUSHITA	KSD5006
2SD386	SANYO	KSC2073
2SD386A	SANYO	KSC2073
2SD387	SANYO	KSC2073
2SD387A	SANYO	KSC2073
2SD389	MATSUSHITA	KSD526
2SD390	MATSUSHITA	KSD526
2SD392	MITSUBISHI	KSC2001
2SD400	SANYO	KSD471
2SD401	N.E.C	KSD401
2SD404	TOSHIBA	KSD568
2SD416	SANYO	KSD5004
2SD418	MATSUSHITA	KSD5006
2SD438	SANYO	KSC2316
2SD43A	TOSHIBA	KSC945
2SD44	TOSHIBA	KSC945

TYPE	MAKER	SAMSUNG
2SD467	HITACHI	KSC2001
2SD471A	N.E.C	KSD471A
2SD475	HITACHI	KSD526
2SD476	HITACHI	KSD526
2SD477	HITACHI	KSC2073
2SD478	HITACHI	KSC2073
2SD488	MOTOROLA	KSD526
2SD489	MOTOROLA	KSD526
2SD490	MOTOROLA	KSD526
2SD526	TOSHIBA	KSD526
2SD538	FUJITSU	KSC1871
2SD539	FUJITSU	KSC1871
2SD545	SANYO	KSC2001
2SD549	TOSHIBA	KSD985
2SD560	N.E.C	KSD560
2SD568	N.E.C	KSD568
2SD569	N.E.C	KSD569
2SD57	MITSUBISHI	KSD880
2SD570	MATSUSHITA	KSD526
2SD571	N.E.C	KSC1008
2SD575	SANYO	KSD5005
2SD576	FUJITSU	KSC2073
2SD58	MITSUBISHI	KSD880
2SD580	FUJITSU	KSD880
2SD589	MATSUSHITA	KSD5006
2SD592	MATSUSHITA	KSD471
2SD596	N.E.C	KSC3265
2SD599	SANYO	KSD471
2SD600	SANYO	KSC2690
2SD601	MATSUSHITA	KSC1623
2SD603	MATSUSHITA	KSC2785
2SD627	SANYO	KSD5004
2SD633	TOSHIBA	KSD560
2SD634	TOSHIBA	KSD560
2SD635	TOSHIBA	KSD560
2SD636	MATSUSHITA	KSC945
2SD637	MATSUSHITA	KSC945
2SD649	TOSHIBA	KSD5004
2SD655	HITACHI	KSC2001
2SD661	MATSUSHITA	KSC945
2SD666A	HITACHI	KSC2310
2SD671	MATSUSHITA	KSC2001
2SD678A	MATSUSHITA	KSD560
2SD679A	MATSUSHITA	KSD560
2SD686	TOSHIBA	KSD560
2SD687	TOSHIBA	KSD560
2SD691	MATSUSHITA	KSD560
2SD721	SANKEN	KSD560
2SD722	SANKEN	KSD560
2SD723	HITACHI	KSD526
2SD724	HITACHI	KSC2233
2SD725	HITACHI	KSD5007

TYPE	MAKER	SAMSUNG
2SD734	SANYO	KSC2001
2SD75	HITACHI	KSC945
2SD754	HITACHI	KSC2001
2SD755	HITACHI	KSC2310
2SD756	HITACHI	KSC2310
2SD759	HITACHI	KSD401
2SD75A	HITACHI	KSC945
2SD760	HITACHI	KSD401
2SD761	SANYO	KSD401
2SD765	HITACHI	KSD5005
2SD768K	HITACHI	KSD560
2SD769	MATSUSHITA	KSC2001
2SD770	MATSUSHITA	KSC2002
2SD771	MATSUSHITA	KSC945
2SD77A	HITACHI	KSC945
2SD78	N.E.C	KSD880
2SD782	HITACHI	KSC2233
2SD784	HITACHI	KSD5006
2SD787	HITACHI	KSC2328A
2SD788	HITACHI	KSC2328A
2SD794	N.E.C	KSD794
2SD808	HITACHI	KSC2001
2SD818	TOSHIBA	KSD5004
2SD819	TOSHIBA	KSD5005
2SD820	TOSHIBA	KSD5006
2SD821	TOSHIBA	KSD5007
2SD823	SANYO	KSC2233
2SD841	TOSHIBA	KSC2518
2SD849	MATSUSHITA	KSD5005
2SD850	MATSUSHITA	KSD5005
2SD856	MATSUSHITA	KSD880
2SD856A	MATSUSHITA	KSD880
2SD856B	MATSUSHITA	KSD880
2SD857A	MATSUSHITA	KSD526
2SD857B	MATSUSHITA	KSD5[illegible]
2SD866	MATSUSHITA	KSC2334
2SD866A	MATSUSHITA	KSC2334
2SD868	TOSHIBA	KSD5000
2SD869	TOSHIBA	KSD5001
2SD870	TOSHIBA	KSD5002
2SD871	TOSHIBA	KSC871
2SD880	TOSHIBA	KSD880
2SD882	TOSHIBA	KSD882
2SD884	MATSUSHITA	KSC2335
2SD885	MATSUSHITA	KSC2335
2SD887	MATSUSHITA	KSD560
2SD893	MATSUSHITA	KSD985
2SD894	SANYO	KSD985
2SD895	SANYO	KSC2334
2SD897	HITACHI	KSD5000
2SD897A	HITACHI	KSD5000
2SD898	HITACHI	KSD5001

TYPE	MAKER	SAMSUNG
2SD899	HITACHI	KSD5002
2SD899A	HITACHI	KSD5002
2SD900	HITACHI	KSD5003
2SD900A	HITACHI	KSD5003
2SD904	SANYO	KSD5001
2SD946	MATSUSHITA	KSD985
2SD947	ROHM	KSD985
2SD949	MATSUSHITA	KSD5000
2SD954	MATSUSHITA	KSD5002
2SD956	HITACHI	KSD5000
2SD957	HITACHI	KSD5003
2SD965	HITACHI	KSD5041
2SD972	SANKEN	KSD560
2SD975	HITACHI	KSC2233
2SD979	SANYO	KSC2749
2SD985	N.E.C	KSD985
2SD986	N.E.C	KSD986
2SK117	TOSHIBA	KSK117
2SK161	TOSHIBA	KSK161
2SK211	TOSHIBA	KSK211
2SK30	TOSHIBA	KSK30
2SK65	MATSUSHITA	KSK65
AA1A4M	N.E.C	KSR1002
AA1A4P	N.E.C	KSR1005
AA1F4M	N.E.C	KSR1003
AA1F4N	N.E.C	KSR1006
AA1L3Z	N.E.C	KSR1009
AA1L4L	N.E.C	KSR1008
AA1L4M	N.E.C	KSR1004
AN1A4M	N.E.C	KSR2002
AN1A4P	N.E.C	KSR2005
AN1F4M	N.E.C	KSR2003
AN1F4N	N.E.C	KSR2006
AN1L3Z	N.E.C	KSR2009
AN1L4L	N.E.C	KSR2008
AN1L4M	N.E.C	KSR2004
BA1A4M	N.E.C	KSR1202
BA1A4P	N.E.C	KSR1205
BA1F4M	N.E.C	KSR1203
BA1F4N	N.E.C	KSR1206
BA1L3Z	N.E.C	KSR1209
BA1L4L	N.E.C	KSR1208
BA1L4M	N.E.C	KSR1204
BC107	SGS	KSC945
BC108	SGS	KSC945
BC109	SGS	KSC945
BC115	SGS	KSC1008
BC116	SGS	KSA708
BC118	SGS	KSC945
BC120	SGS	KSC945
BC130	SGS	KSC945
BC131	SGS	KSC945
BC132	SGS	KSC945

TYPE	MAKER	SAMSUNG
BC134	SGS	KSC945
BC135	SGS	KSC945
BC136	SGS	KSC945
BC138	SGS	KSC1008
BC140	SGS	KSC1008
BC141	SGS	KSC945
BC147	SGS	KSC945
BC148	SGS	KSC945
BC149	SGS	KSC945
BC150	SGS	KSC945
BC151	SGS	KSC945
BC152	SGS	KSC945
BC153	SGS	KSA733
BC154	SGS	KSA733
BC157	SGS	KSA733
BC158	SGS	KSA733
BC159	SGS	KSA733
BC160	SGS	KSA708
BC161	SGS	KSA708
BC167	SGS	KSC945
BC168	SGS	KSC945
BC169	SGS	KSC945
BC170	SGS	KSC945
BC171	SGS	KSC945
BC172	SGS	KSC945
BC173	SGS	KSC945
BC177	SGS	KSA733
BC181	SGS	KSA733
BC182	SGS	KSC945
BC183	SGS	KSC945
BC184	SGS	KSC945
BC186	SGS	KSA733
BC187	SGS	KSA733
BC190	SGS	KSC945
BC200	SGS	KSA733
BC204	SGS	KSA733
BC205	SGS	KSA733
BC206	SGS	KSA733
BC207	SGS	KSC945
BC208	SGS	KSC945
BC209	SGS	KSC945
BC211	SGS	KSC1008
BC212	SGS	KSA733
BC213	SGS	KSA733
BC214	SGS	KSA733
BC218	SGS	KSC945
BC237	SGS	BC237
BC238	SGS	BC238
BC239	SGS	BC239
BC250	SGS	KSA733
BC251	SGS	KSA733
BC252	SGS	KSA733

TYPE	MAKER	SAMSUNG
BC253	SGS	KSA733
BC257	SGS	KSA733
BC258	SGS	KSA733
BC259	SGS	KSA733
BC260	SGS	KSA733
BC261	SGS	KSA733
BC262	SGS	KSA733
BC263	SGS	KSA733
BC267	SGS	KSC945
BC268	SGS	KSC945
BC269	SGS	KSC945
BC270	SGS	KSC945
BC281	SGS	KSA733
BC294	SGS	KSA708
BC295	SGS	KSC945
BC307	SGS	BC307
BC308	SGS	BC308
BC309	SGS	BC309
BC315	SGS	KSA733
BC317	SGS	KSC945
BC318	SGS	KSC945
BC319	SGS	KSC945
BC320	SGS	KSA733
BC322	SGS	KSA733
BC327	SGS	BC327
BC328	SGS	BC328
BC330	SGS	KSC945
BC332	SGS	KSC945
BC333	SGS	KSC945
BC334	SGS	KSA733
BC335	SGS	KSC945
BC336	SGS	KSA733
BC337	SGS	BC337
BC338	SGS	BC338
BC340	SGS	KSC1008
BC341	SGS	KSC1008
BC342	SGS	KSC1008
BC343	SGS	KSA708
BC347	SGS	KSC945
BC348	SGS	KSC945
BC349	SGS	KSC945
BC350	SGS	KSA733
BC351	SGS	KSA733
BC352	SGS	KSA733
BC358	SGS	KSA708
BC360	SGS	KSA708
BC361	SGS	KSD261
BC368	SGS	KSA643
BC369	SGS	KSA733
BC381	SGS	KSC945
BC382	SGS	KSC945
BC383	SGS	KSC945

TYPE	MAKER	SAMSUNG
BC384	SGS	KSC945
BC385	SGS	KSC945
BC386	SGS	KSC945
BC395	SGS	KSC1008
BC396	SGS	KSA708
BC407	SGS	KSC945
BC408	SGS	KSC945
BC409	SGS	KSC945
BC417	SGS	KSA733
BC418	SGS	KSA733
BC419	SGS	KSA733
BC437	SGS	KSC945
BC438	SGS	KSC945
BC439	SGS	KSC945
BC451	SGS	KSC945
BC452	SGS	KSC945
BC453	SGS	KSC945
BC454	SGS	KSA733
BC456	SGS	KSA733
BC467	SGS	KSC945
BC468	SGS	KSC945
BC469	SGS	KSC945
BC512	SGS	KSA733
BC513	SGS	KSA733
BC514	SGS	KSA733
BC524	SGS	KSC945
BC546	SGS	BC546
BC547	SGS	BC547
BC548	SGS	BC548
BC549	SGS	BC549
BC550	SGS	BC550
BC556	SGS	KSC1222
BC557	SGS	KSC1222
BC558	SGS	KSC1222
BC559	SGS	KSC1222
BC560	SGS	KSC1222
BC582	SGS	KSC945
BC583	SGS	KSC945
BC584	SGS	KSC945
BC586	SGS	KSA733
BC714	SGS	KSA733
BC807	SGS	BC807
BC808	SGS	BC808
BC817	SGS	BC817
BC818	SGS	BC818
BC846A	SGS	BC846
BC846B	SGS	BC846
BC847A	SGS	BC847
BC847B	SGS	BC847
BC847C	SGS	BC847
BC848A	SGS	BC848
BC848B	SGS	BC848

TYPE	MAKER	SAMSUNG
BC848C	SGS	BC848
BC849B	SGS	BC849
BC850B	SGS	BC850
BC850C	SGS	BC850
BC856A	SGS	BC856
BC856B	SGS	BC856
BC857A	SGS	BC857
BC857B	SGS	BC857
BC857C	SGS	BC857
BC858A	SGS	BC858
BC858B	SGS	BC858
BC858C	SGS	BC858
BC859B	SGS	BC859
BC859C	SGS	BC859
BC860	SGS	BC860
BCW29	MOTOROLA	BCW29
BCW31	MOTOROLA	BCW31
BCW60A	MOTOROLA	BCW60A
BCW60B	MOTOROLA	BCW60B
BCW60C	MOTOROLA	BCW60C
BCW60D	MOTOROLA	BCW60D
BCW61A	MOTOROLA	BCW61A
BCW61B	MOTOROLA	BCW61B
BCW61C	MOTOROLA	BCW61C
BCW61D	MOTOROLA	BCW61D
BCW71	MOTOROLA	BCW71
BCW72	MOTOROLA	BCW72
BCX70G	MOTOROLA	BCX70G
BCX70H	MOTOROLA	BCX70H
BCX70J	MOTOROLA	BCX70J
BCX70K	MOTOROLA	BCX70K
BCX71G	MOTOROLA	BCX71G
BCX71H	MOTOROLA	BCX71H
BCX71J	MOTOROLA	BCX71J
BCX71K	MOTOROLA	BCX71K
BD135	SGS	BD135
BD136	SGS	BD136
BD137	SGS	BD137
BD138	SGS	BD138
BD139	SGS	BD139
BD140	SGS	BD140
BD157	SGS	BD157
BD158	SGS	BD158
BD159	SGS	BD159
BD175	SGS	BD175
BD176	SGS	BD176
BD177	SGS	BD177
BD178	SGS	BD178
BD179	SGS	BD179
BD180	SGS	BD180
BD233	SGS	BD233
BD234	SGS	BD234
BD235	SGS	BD235
BD236	SGS	BD236
BD237	SGS	BD237

TYPE	MAKER	SAMSUNG
BD238	SGS	BD238
BD239	SGS	BD239
BD240	SGS	BD240
BD241	SGS	BD241
BD242	SGS	BD242
BD243	SGS	BD243
BD244	SGS	BD244
BD375	SGS	BD375
BD376	SGS	BD376
BD377	SGS	BD377
BD378	SGS	BD378
BD379	SGS	BD379
BD380	SGS	BD380
BD433	SGS	BD433
BD434	SGS	BD434
BD435	SGS	BD435
BD436	SGS	BD436
BD437	SGS	BD437
BD438	SGS	BD438
BD440	SGS	BD440
BD441	SGS	BD441
BD442	SGS	BD442
BD533	SGS	BD533
BD534	SGS	BD534
BD535	SGS	BD535
BD536	SGS	BD536
BD537	SGS	BD537
BD538	SGS	BD538
BD675A	SGS	BD675A
BD676A	SGS	BD676A
BD677A	SGS	BD677A
BD678A	SGS	BD678A
BD679A	SGS	BD679A
BD680A	SGS	BD680A
BD681	SGS	BD681
BD682	SGS	BD682
BD683	SGS	BD683
BD684	SGS	BD684
BDV64	SGS	BDV64
BDV65	SGS	BDV65
BDW23	SGS	BDW23
BDW24	SGS	BDW24
BDW93	SGS	BDW93
BDW94	SGS	BDW94
BDX33	SGS	BDX33
BDX34	SGS	BDX34
BDX53	SGS	BDX53
BDX54	SGS	BDX54
BF254	SGS	BF254
BF255	SGS	BF255
BF291	SGS	BF291
BF293	SGS	BF293

TYPE	MAKER	SAMSUNG
BF321	SGS	BF321
BN1A4M	N.E.C	BN1A4M
BN1A4P	N.E.C	BN1A4P
BN1F4M	N.E.C	KSR2203
BN1F4N	N.E.C	KSR2206
BN1L3Z	N.E.C	KSR2209
BN1L4L	N.E.C	KSR2208
BN1L4M	N.E.C	KSR2204
BU406	SGS	BU406
BU407	SGS	BU407
BU407H	SGS	BU407H
BU426	SGS	KSC5023
BU508	SGS	BU508
BU508AF	SGS	BU508AF
BU806	SGS	BU806
BU807	SGS	BU807
BUV46	SGS	KSC5039
CS8050	FAIRCHILD	SS8050
CS8550	FAIRCHILD	SS8550
CS9011	FAIRCHILD	SS9011
CS9012	FAIRCHILD	SS9012
CS9013	FAIRCHILD	SS9013
CS9014	FAIRCHILD	SS9014
CS9015	FAIRCHILD	SS9015
CS9016	FAIRCHILD	SS9016
CS9018	FAIRCHILD	SS9018
DTA114EK	ROHM	KSR2102
DTA114EN	ROHM	KSR2002
DTA114ES	ROHM	KSR2202
DTA114TK	ROHM	KSR2110
DTA114TN	ROHM	KSR2010
DTA114TS	ROHM	KSR2210
DTA114YK	ROHM	KSR2105
DTA114YN	ROHM	KSR2005
DTA114YS	ROHM	KSR2205
DTA124EK	ROHM	KSR2103
DTA124EN	ROHM	KSR2003
DTA124ES	ROHM	KSR2203
DTA124YK	ROHM	KSR2106
DTA124YN	ROHM	KSR2006
DTA124YS	ROHM	KSR2206
DTA143EK	ROHM	KSR2101
DTA143EN	ROHM	KSR2001
DTA143ES	ROHM	KSR2201
DTA143TK	ROHM	KSR2109
DTA143TN	ROHM	KSR2009
DTA143TS	ROHM	KSR2209
DTA143XK	ROHM	KSR2107
DTA143XN	ROHM	KSR2007
DTA143XS	ROHM	KSR2207
DTA144EK	ROHM	KSR2104
DTA144EN	ROHM	KSR2004
DTA144ES	ROHM	KSR2204

TYPE	MAKER	SAMSUNG
DTA144WK	ROHM	KSR2108
DTA144WN	ROHM	KSR2008
DTA144WS	ROHM	KSR2208
DTC114EK	ROHM	KSR1102
DTC114EN	ROHM	KSR1002
DTC114ES	ROHM	KSR1202
DTC114TK	ROHM	KSR1110
DTC114TN	ROHM	KSR1010
DTC114TS	ROHM	KSR1210
DTC114YK	ROHM	KSR1105
DTC114YN	ROHM	KSR1005
DTC114YS	ROHM	KSR1205
DTC124EK	ROHM	KSR1103
DTC124EN	ROHM	KSR1003
DTC124ES	ROHM	KSR1203
DTC124YK	ROHM	KSR1106
DTC124YN	ROHM	KSR1006
DTC124YS	ROHM	KSR1206
DTC143EK	ROHM	KSR1101
DTC143EN	ROHM	KSR1001
DTC143ES	ROHM	KSR1201
DTC143TK	ROHM	KSR1109
DTC143TN	ROHM	KSR1009
DTC143TS	ROHM	KSR1209
DTC143XK	ROHM	KSR1107
DTC143XN	ROHM	KSR1007
DTC143XS	ROHM	KSR1207
DTC144EK	ROHM	KSR1104
DTC144EN	ROHM	KSR1004
DTC144ES	ROHM	KSR1204
DTC144WK	ROHM	KSR1108
DTC144WN	ROHM	KSR1008
DTC144WS	ROHM	KSR1208
FA1A4M	N.E.C	KSR1102
FA1A4F	N.E.C	KSR1105
FA1F4M	N.E.C	KSR1103
FA1F4N	N.E.C	KSR1106
FA1L3Z	N.E.C	KSR1109
FA1L4L	N.E.C	KSR1108
FA1L4M	N.E.C	KSR1104
FN1A4M	N.E.C	KSR2102
FN1A4P	N.E.C	KSR2105
FN1F4M	N.E.C	KSR2103
FN1F4N	N.E.C	KSR2106
FN1L3Z	N.E.C	KSR2109
FN1L4L	N.E.C	KSR2108
FN1L4M	N.E.C	KSR2104
KRA2001	K.E.C	KSR2001
KRA2002	K.E.C	KSR2002
KRA2003	K.E.C	KSR2003
KRA2004	K.E.C	KSR2004
KRA2005	K.E.C	KSR2013

TYPE	MAKER	SAMSUNG
KRA2006	K.E.C	KSR2014
KRA2007	K.E.C	KSR2006
KRA2008	K.E.C	KSR2007
KRA2009	K.E.C	KSR2008
KRA2010	K.E.C	KSR2009
KRA2011	K.E.C	KSR2010
KRA2201	K.E.C	KSR2201
KRA2202	K.E.C	KSR2202
KRA2203	K.E.C	KSR2203
KRA2204	K.E.C	KSR2204
KRA2205	K.E.C	KSR2213
KRA2206	K.E.C	KSR2214
KRA2207	K.E.C	KSR2206
KRA2208	K.E.C	KSR2207
KRA2209	K.E.C	KSR2208
KRA2210	K.E.C	KSR2209
KRA2211	K.E.C	KSR2210
KRA2401	K.E.C	KSR2101
KRA2402	K.E.C	KSR2102
KRA2403	K.E.C	KSR2103
KRA2404	K.E.C	KSR2104
KRA2405	K.E.C	KSR2113
KRA2406	K.E.C	KSR2114
KRA2407	K.E.C	KSR2106
KRA2408	K.E.C	KSR2107
KRA2409	K.E.C	KSR2108
KRA2410	K.E.C	KSR2109
KRA2411	K.E.C	KSR2110
KRC1001	K.E.C	KSR1001
KRC1002	K.E.C	KSR1002
KRC1003	K.E.C	KSR1003
KRC1004	K.E.C	KSR1004
KRC1005	K.E.C	KSR1013
KRC1006	K.E.C	KSR1014
KRC1007	K.E.C	KSR1006
KRC1008	K.E.C	KSR1007
KRC1009	K.E.C	KSR1008
KRC1010	K.E.C	KSR1009
KRC1011	K.E.C	KSR1010
KRC1201	K.E.C	KSR1201
KRC1202	K.E.C	KSR1202
KRC1203	K.E.C	KSR1203
KRC1204	K.E.C	KSR1204
KRC1205	K.E.C	KSR1213
KRC1206	K.E.C	KSR1214
KRC1207	K.E.C	KSR1206
KRC1208	K.E.C	KSR1207
KRC1209	K.E.C	KSR1208
KRC1210	K.E.C	KSR1209
KRC1211	K.E.C	KSR1210
KRC1401	K.E.C	KSR1101
KRC1402	K.E.C	KSR1102

TYPE	MAKER	SAMSUNG
KRC1403	K.E.C	KSR1103
KRC1404	K.E.C	KSR1104
KRC1405	K.E.C	KSR1113
KRC1406	K.E.C	KSR1114
KRC1407	K.E.C	KSR1106
KRC1408	K.E.C	KSR1107
KRC1409	K.E.C	KSR1108
KRC1410	K.E.C	KSR1109
KRC1411	K.E.C	KSR1110
KTA1013	K.E.C	KSA1013
KTA1015	K.E.C	KSA733
KTA1015	K.E.C	KSA733
KTA473	K.E.C	KSA473
KTA562T6M	K.E.C	KSA539
KTA817A	K.E.C	KSA954
KTA940	K.E.C	KSA940
KTA949	K.E.C	KSA1013
KTA950	K.E.C	KSA643
KTA965	K.E.C	KSA916
KTA966A	K.E.C	KSA928A
KTA968	K.E.C	KSA940
KTA968A	K.E.C	KSA940
KTB595	K.E.C	KSB601
KTB596	K.E.C	KSB596
KTB686	K.E.C	KSB601
KTB688	K.E.C	KSB643
KTB834	K.E.C	KSB834
KTC100	K.E.C	KSC184
KTC1173	K.E.C	KSC1173
KTC1569	K.E.C	KSC1507
KTC1627	K.E.C	KSC2316
KTC1815	K.E.C	KSC945
KTC1815A	K.E.C	KSC945
KTC1923	K.E.C	KSC1674
KTC1959	K.E.C	KSD471A
KTC2073	K.E.C	KSC2073
KTC2075	K.E.C	KSD526
KTC2120	K.E.C	KSD471A
KTC2229	K.E.C	KSC2310
KTC2230	K.E.C	KSC2310
KTC2230A	K.E.C	KSC2310
KTC2231	K.E.C	KSC1507
KTC2231A	K.E.C	KSC1507
KTC2233	K.E.C	KSC2233
KTC2235	K.E.C	KSC2316
KTC2236A	K.E.C	KSC2500
KTC2238	K.E.C	KSC2073
KTC2238A	K.E.C	KSD401
KTC2240	K.E.C	KSC1845
KTC2283	K.E.C	KSC2383
KTC2482	K.E.C	KSC2330
KTC2483	K.E.C	KSC1507

TYPE	MAKER	SAMSUNG
KTC2500	K.E.C	KSC2500
KTC2553	K.E.C	KSC2335
KTC3122	K.E.C	KSC3122
KTC380TM	K.E.C	KSC838
KTC382	K.E.C	KSC1187
KTC383	K.E.C	KSC1674
KTC388A	K.E.C	KSC1674
KTC732TM	K.E.C	KSC945
KTC941TM	K.E.C	KSC945
KTD525	K.E.C	KSD526
KTD526	K.E.C	KSD526
KTD880	K.E.C	KSD880
KTK117	K.E.C	KSK117
KTK161	K.E.C	KSK161
KTK30	K.E.C	KSK30
MJE13004	MOTOROLA	KSE13004
MJE13005	MOTOROLA	KSE13005
MJE13006	MOTOROLA	KSE13006
MJE13007	MOTOROLA	KSE13007
MJE13008	MOTOROLA	KSE13008
MJE13009	MOTOROLA	KSE13009
MJE170	MOTOROLA	KSE170
MJE171	MOTOROLA	KSE171
MJE172	MOTOROLA	KSE172
MJE180	MOTOROLA	KSE180
MJE181	MOTOROLA	KSE181
MJE182	MOTOROLA	KSE182
MJE2955T	MOTOROLA	KSE2955T
MJE3055T	MOTOROLA	KSE3055T
MJE340	MOTOROLA	KSE340
MJE350	MOTOROLA	KSE350
MMBA812M5	MOTOROLA	KST812M5
MMBA812M6	MOTOROLA	KST812M6
MMBA812M7	MOTOROLA	KST812M7
MMBA812M8	MOTOROLA	KST812M8
MMBC1009F1	MOTOROLA	KST1009F1
MMBC1009F2	MOTOROLA	KST1009F2
MMBC1009F3	MOTOROLA	KST1009F3
MMBC1009F4	MOTOROLA	KST1009F4
MMBC1009F5	MOTOROLA	KST1009F5
MMBC1623L3	MOTOROLA	KST1623L3
MMBC1623L4	MOTOROLA	KST1623L4
MMBC1623L5	MOTOROLA	KST1623L5
MMBC1623L6	MOTOROLA	KST1623L6
MMBC1623L7	MOTOROLA	KST1623L7
MMBR5179	MOTOROLA	KST5179
MMBT2222	MOTOROLA	KST2222
MMBT2222A	MOTOROLA	KST2222A
MMBT2484	MOTOROLA	KST2484
MMBT2907	MOTOROLA	KST2907
MMBT2907A	MOTOROLA	KST2907A
MMBT3903	MOTOROLA	KST3903

TYPE	MAKER	SAMSUNG
MMBT3904	MOTOROLA	KST3904
MMBT3906	MOTOROLA	KST3906
MMBT4123	MOTOROLA	KST4123
MMBT4124	MOTOROLA	KST4124
MMBT4126	MOTOROLA	KST4126
MMBT4401	MOTOROLA	KST4401
MMBT4403	MOTOROLA	KST4403
MMBT5086	MOTOROLA	KST5086
MMBT5087	MOTOROLA	KST5087
MMBT5088	MOTOROLA	KST5088
MMBT5089	MOTOROLA	KST5089
MMBT5401	MOTOROLA	KST5401
MMBT5550	MOTOROLA	KST5550
MMBT6428	MOTOROLA	KST6428
MMBTA05	MOTOROLA	KST05
MMBTA06	MOTOROLA	KST06
MMBTA13	MOTOROLA	KST13
MMBTA14	MOTOROLA	KST14
MMBTA20	MOTOROLA	KST20
MMBTA42	MOTOROLA	KST42
MMBTA43	MOTOROLA	KST43
MMBTA55	MOTOROLA	KST55
MMBTA56	MOTOROLA	KST56
MMBTA63	MOTOROLA	KST63
MMBTA64	MOTOROLA	KST64
MMBTA92	MOTOROLA	KST92
MMBTA93	MOTOROLA	KST93
MMBTH10	MOTOROLA	KST10
MMBTH24	MOTOROLA	KST24
MPS2222	MOTOROLA	KSP2222
MPS2222A	MOTOROLA	KSP2222A
MPS2907	MOTOROLA	KSP2907
MPS2907A	MOTOROLA	KSP2907A
MPS5172	MOTOROLA	KSP5172
MPS5179	MOTOROLA	KSP5179
MPS6520	MOTOROLA	KSP6520
MPS6521	MOTOROLA	KSP6521
MPS8097	MOTOROLA	KSP8097
MPS8098	MOTOROLA	KSP8098
MPS8099	MOTOROLA	KSP8099
MPS8598	MOTOROLA	KSP8598
MPS8599	MOTOROLA	KSP8599
MPSA05	MOTOROLA	KSP05
MPSA06	MOTOROLA	KSP06
MPSA12	MOTOROLA	KSP12
MPSA13	MOTOROLA	KSP13
MPSA14	MOTOROLA	KSP14
MPSA25	MOTOROLA	KSP25
MPSA26	MOTOROLA	KSP26
MPSA27	MOTOROLA	KSP27
MPSA42	MOTOROLA	KSP42
MPSA43	MOTOROLA	KSP43
MPSA44	MOTOROLA	KSP44
MPSA45	MOTOROLA	KSP45
MPSA55	MOTOROLA	KSP55

TYPE	MAKER	SAMSUNG
MPSA56	MOTOROLA	KSP56
MPSA62	MOTOROLA	KSP62
MPSA63	MOTOROLA	KSP63
MPSA64	MOTOROLA	KSP64
MPSA75	MOTOROLA	KSP75
MPSA76	MOTOROLA	KSP76
MPSA77	MOTOROLA	KSP77
MPSA92	MOTOROLA	KSP92
MPSA93	MOTOROLA	KSP93
MPSA94	MOTOROLA	KSP94
MPSH10	MOTOROLA	KSP10
MPSH11	MOTOROLA	KSP11
MPSH17	MOTOROLA	KSP17
MPSH20	MOTOROLA	KSP20
MPSH24	MOTOROLA	KSP24
RN1001	TOSHIBA	KSR1001
RN1002	TOSHIBA	KSR1002
RN1003	TOSHIBA	KSR1003
RN1004	TOSHIBA	KSR1004
RN1005	TOSHIBA	KSR1013
RN1006	TOSHIBA	KSR1014
RN1007	TOSHIBA	KSR1005
RN1008	TOSHIBA	KSR1006
RN1009	TOSHIBA	KSR1008
RN1010	TOSHIBA	KSR1009
RN1011	TOSHIBA	KSR1010
RN1201	TOSHIBA	KSR1201
RN1202	TOSHIBA	KSR1202
RN1203	TOSHIBA	KSR1203
RN1204	TOSHIBA	KSR1204
RN1205	TOSHIBA	KSR1213
RN1206	TOSHIBA	KSR1214
RN1207	TOSHIBA	KSR1205
RN1208	TOSHIBA	KSR1206
RN1209	TOSHIBA	KSR1208
RN1210	TOSHIBA	KSR1209
RN1211	TOSHIBA	KSR1210
RN1401	TOSHIBA	KSR1101
RN1402	TOSHIBA	KSR1102
RN1403	TOSHIBA	KSR1103
RN1404	TOSHIBA	KSR1104
RN1405	TOSHIBA	KSR1113
RN1406	TOSHIBA	KSR1114
RN1407	TOSHIBA	KSR1105
RN1408	TOSHIBA	KSR1106
RN1409	TOSHIBA	KSR1108
RN1410	TOSHIBA	KSR1109
RN1411	TOSHIBA	KSR1110
RN2001	TOSHIBA	KSR2001
RN2002	TOSHIBA	KSR2002
RN2003	TOSHIBA	KSR2003
RN2004	TOSHIBA	KSR2004
RN2005	TOSHIBA	KSR2013
RN2006	TOSHIBA	KSR2014
RN2007	TOSHIBA	KSR2005

TYPE	MAKER	SAMSUNG
RN2008	TOSHIBA	KSR2006
RN2009	TOSHIBA	KSR2008
RN2010	TOSHIBA	KSR2009
RN2011	TOSHIBA	KSR2010
RN2201	TOSHIBA	KSR2201
RN2202	TOSHIBA	KSR2202
RN2203	TOSHIBA	KSR2203
RN2204	TOSHIBA	KSR2204
RN2205	TOSHIBA	KSR2213
RN2206	TOSHIBA	KSR2214
RN2207	TOSHIBA	KSR2205
RN2208	TOSHIBA	KSR2206
RN2209	TOSHIBA	KSR2208
RN2210	TOSHIBA	KSR2209
RN2211	TOSHIBA	KSR2210
RN2401	TOSHIBA	KSR2101
RN2402	TOSHIBA	KSR2102
RN2403	TOSHIBA	KSR2103
RN2404	TOSHIBA	KSR2104
RN2405	TOSHIBA	KSR2113
RN2406	TOSHIBA	KSR2114
RN2407	TOSHIBA	KSR2105
RN2408	TOSHIBA	KSR2106
RN2409	TOSHIBA	KSR2108
RN2410	TOSHIBA	KSR2109
RN2411	TOSHIBA	KSR2110
S2000A	TOSHIBA	KSD5006
S2055	TOSHIBA	KSD5006
S2056	TOSHIBA	KSD5004
TIP100	T.I	TIP100
TIP101	T.I	TIP101
TIP102	T.I	TIP102
TIP105	T.I	TIP105
TIP106	T.I	TIP106
TIP107	T.I	TIP107
TIP110	T.I	TIP110
TIP111	T.I	TIP111
TIP112	T.I	TIP112
TIP115	T.I	TIP115
TIP116	T.I	TIP116
TIP117	T.I	TIP117
TIP120	T.I	TIP120
TIP121	T.I	TIP121
TIP122	T.I	TIP122
TIP125	T.I	TIP125
TIP126	T.I	TIP126
TIP127	T.I	TIP127
TIP140	T.I	TIP140
TIP140F	T.I	TIP140F
TIP140T	T.I	TIP140T
TIP141	T.I	TIP141
TIP141F	T.I	TIP141F
TIP141T	T.I	TIP141T
TIP142	T.I	TIP142
TIP142F	T.I	TIP142F

TYPE	MAKER	SAMSUNG
TIP142T	T.I	TIP142T
TIP145	T.I	TIP145
TIP145F	T.I	TIP145F
TIP145T	T.I	TIP145T
TIP146	T.I	TIP146
TIP146F	T.I	TIP146F
TIP146T	T.I	TIP146T
TIP147	T.I	TIP147
TIP147F	T.I	TIP147F
TIP147T	T.I	TIP147T
TIP29	T.I	TIP29
TIP29A	T.I	TIP29A
TIP29B	T.I	TIP29B
TIP29C	T.I	TIP29C
TIP30	T.I	TIP30
TIP30A	T.I	TIP30A
TIP30B	T.I	TIP30B
TIP30C	T.I	TIP30C
TIP31	T.I	TIP31
TIP31A	T.I	TIP31A
TIP31B	T.I	TIP31B
TIP31C	T.I	TIP31C
TIP32	T.I	TIP32
TIP32A	T.I	TIP32A
TIP32B	T.I	TIP32B
TIP32C	T.I	TIP32C
TIP41	T.I	TIP41
TIP41A	T.I	TIP41A
TIP41B	T.I	TIP41B
TIP41C	T.I	TIP41C
TIP42	T.I	TIP42
TIP42A	T.I	TIP42A
TIP42B	T.I	TIP42B
TIP42C	T.I	TIP42C
UN1110	MATSUSHITA	KSR2012
UN1111	MATSUSHITA	KSR2002
UN1112	MATSUSHITA	KSR2003
UN1113	MATSUSHITA	KSR2004
UN1114	MATSUSHITA	KSR2005
UN1115	MATSUSHITA	KSR2010
UN1116	MATSUSHITA	KSR2009
UN1117	MATSUSHITA	KSR2011
UN111E	MATSUSHITA	KSR2008
UN111F	MATSUSHITA	KSR2007
UN1210	MATSUSHITA	KSR1012
UN1211	MATSUSHITA	KSR1002
UN1212	MATSUSHITA	KSR1003
UN1213	MATSUSHITA	KSR1004
UN1214	MATSUSHITA	KSR1005
UN1215	MATSUSHITA	KSR1010
UN1216	MATSUSHITA	KSR1009
UN1217	MATSUSHITA	KSR1012
UN121E	MATSUSHITA	KSR1008
UN121F	MATSUSHITA	KSR1007
UN2110	MATSUSHITA	KSR2112
UN2111	MATSUSHITA	KSR2102

TYPE	MAKER	SAMSUNG
UN2112	MATSUSHITA	KSR2103
UN2113	MATSUSHITA	KSR2104
UN2114	MATSUSHITA	KSR2105
UN2115	MATSUSHITA	KSR2110
UN2116	MATSUSHITA	KSR2109
UN2117	MATSUSHITA	KSR2111
UN211F	MATSUSHITA	KSR2107
UN212E	MATSUSHITA	KSR2108
UN2210	MATSUSHITA	KSR1112
UN2211	MATSUSHITA	KSR1102
UN2212	MATSUSHITA	KSR1103
UN2213	MATSUSHITA	KSR1104
UN2214	MATSUSHITA	KSR1105
UN2215	MATSUSHITA	KSR1110
UN2216	MATSUSHITA	KSR1109
UN2217	MATSUSHITA	KSR1111
UN221E	MATSUSHITA	KSR1108
UN221F	MATSUSHITA	KSR1107
UN4110	MATSUSHITA	KSR2212
UN4111	MATSUSHITA	KSR2202
UN4112	MATSUSHITA	KSR2203
UN4113	MATSUSHITA	KSR2204
UN4114	MATSUSHITA	KSR2205
UN4115	MATSUSHITA	KSR2210
UN4116	MATSUSHITA	KSR2209
UN4117	MATSUSHITA	KSR2211
UN411E	MATSUSHITA	KSR2208
UN411F	MATSUSHITA	KSR2207
UN4210	MATSUSHITA	KSR1212
UN4211	MATSUSHITA	KSR1202
UN4212	MATSUSHITA	KSR1203
UN4213	MATSUSHITA	KSR1204
UN4214	MATSUSHITA	KSR1205
UN4215	MATSUSHITA	KSR1210
UN4216	MATSUSHITA	KSR1209
UN4217	MATSUSHITA	KSR1211
UN421E	MATSUSHITA	KSR1208
UN421F	MATSUSHITA	KSR1207
2SA1200	TOSHIBA	KSA1200
2SA1201	TOSHIBA	KSA1201
2SA1202	TOSHIBA	KSA1202
2SA1203	TOSHIBA	KSA1203
2SA1204	TOSHIBA	KSA1204
2SA1241	TOSHIBA	KSA1241
2SA1242	TOSHIBA	KSA1242
2SA1243	TOSHIBA	KSA1243
2SA1244	TOSHIBA	KSA1244
2SA1304	TOSHIBA	KSA1304
2SA1406	SANYO	KSA1406
2SA1625	NEC	KSA1625
2SB798	NEC	KSB798
2SB906	TOSHIBA	KSB906
2SB907	TOSHIBA	KSB907
2SB1015	TOSHIBA	KSB1015
2SB1017	TOSHIBA	KSB1017
2SB1022	TOSHIBA	KSB1022

TYPE	MAKER	SAMSUNG
2SB1023	TOSHIBA	KSB1023
2SB1097	NEC	KSB1097
2SB1098	NEC	KSB1098
2SB1121	SANYO	KSB1121
2SB1366	KEC	KSB1366
2SC2258	MATSUSHITA	KSC2258
2SC2258A	MATSUSHITA	KSC2258A
2SC2880	TOSHIBA	KSC2880
2SC2881	TOSHIBA	KSC2881
2SC2882	TOSHIBA	KSC2882
2SC2883	TOSHIBA	KSC2883
2SC2884	TOSHIBA	KSC2884
2SC2982	TOSHIBA	KSC2982
2SC3073	TOSHIBA	KSC3073
2SC3074	TOSHIBA	KSC3074
2SC3076	TOSHIBA	KSC3076
2SC3158	NEC	KSC3158
2SC3233	TOSHIBA	KSC3233
2SC3296	TOSHIBA	KSC3296
2SC3953	SANYO	KSC3953
2SD999	NEC	KSD999
2SD1221	TOSHIBA	KSD1221
2SD1222	TOSHIBA	KSD1222
2SD1273	MATSUSHITA	KSD1273
2SD1406	TOSHIBA	KSD1406
2SD1408	TOSHIBA	KSD1408
2SD1413	TOSHIBA	KSD1413
2SD1417	TOSHIBA	KSD1417
2SD1588	NEC	KSD1588
2SD1589	NEC	KSD1589
2SD1621	SANYO	KSD1621
2SD1944	ROHM	KSD1944
2SD2012	TOSHIBA	KSD2012
MJD29	MOTOROLA	KSH29
MJD29C	MOTOROLA	KSH29C
MJD30	MOTOROLA	KSH30
MJD30C	MOTOROLA	KSH30C
MJD31	MOTOROLA	KSH31
MJD31C	MOTOROLA	KSH31C
MJD32	MOTOROLA	KSH32
MJD32C	MOTOROLA	KSH32C
MJD41C	MOTOROLA	KSH41C
MJD42C	MOTOROLA	KSH42C
MJD44H11	MOTOROLA	KSH44H11
MJD45H11	MOTOROLA	KSH45H11
MJD47	MOTOROLA	KSH47
MJD50	MOTOROLA	KSH50
MJD112	MOTOROLA	KSH112
MJD117	MOTOROLA	KSH117
MJD122	MOTOROLA	KSH122
MJD127	MOTOROLA	KSH127
MJD200	MOTOROLA	KSH200
MJD210	MOTOROLA	KSH210
MJD340	TOSHIBA	KSH340
MJD350	MOTOROLA	KSH350
MJD2955	MOTOROLA	KSH2955
MJD3055	MOTOROLA	KSH3055

International Rectifier	SAMSUNG Direct Replacement	International Rectifier	SAMSUNG Direct Replacement	International Rectifier	SAMSUNG Direct Replacement	International Rectifier	SAMSUNG Direct Replacement
IRF510	IRF510	IRF842	IRF842	IRFP241	IRFP241	IRFR222	IRFR222
IRF511	IRF511	IRF843	IRF843	IRFP242	IRFP242	IRFR210	IRFR210
IRF512	IRF512	IRF9510	IRF9510	IRFP243	IRFP243	IRFR212	IRFR212
IRF513	IRF513	IRF9511	IRF9511	IRFP250	IRFP250	IRFR120	IRFR120
IRF520	IRF520	IRF9512	IRF9512	IRFP251	IRFP251	IRFP121	IRFR121
IRF521	IRF521	IRF9513	IRF9513	IRFP252	IRFP252	IRFR110	IRFR110
IRF522	IRF522	IRF9520	IRF9520	IRFP253	IRFP253	IRFR111	IRFR111
IRF523	IRF523	IRF9521	IRF9521	IRFP330	IRFP330	IRFR020	IRFR020
IRF610	IRF610	IRF9522	IRF9522	IRFP331	IRFP331	IRFU220	IRFU220
IRF611	IRF611	IRF9523	IRF9523	IRFP332	IRFP332	IRFU222	IRFU222
IRF612	IRF612	IRF9530	IRF9530	IRFP333	IRFP333	IRFU210	IRFU212
IRF613	IRF613	IRF9531	IRF9531	IRFP340	IRFP340	IRFU212	IRFU120
IRF620	IRF620	IRF9532	IRF9532	IRFP341	IRFP341	IRFU120	IRFU210
IRF621	IRF621	IRF9533	IRF9533	IRFP342	IRFP342	IRFU121	IRFU121
IRF622	IRF622	IRF9540	IRF9540	IRFP343	IRFP343	IRFU110	IRFU110
IRF623	IRF623	IRF9541	IRF9541	IRFP350	IRFP350	IRFU111	IRFU111
IRF630	IRF630	IRF9542	IRF9542	IRFP351	IRFP351	IRFU020	IRFU020
IRF631	IRF631	IRF9543	IRF9543	IRFP352	IRFP352	IRFU022	IRFU022
IRF632	IRF632	IRF9610	IRF9610	IRFP353	IRFP353	IRFR022	IRFR022
IRF633	IRF633	IRF9611	IRF9611	IRFP430	IRFP430	IRFR010	IRFR010
IRF640	IRF640	IRF9612	IRF9612	IRFP431	IRFP431	IRFR012	IRFR012
IRF641	IRF641	IRF9613	IRF9613	IRFP432	IRFP432	IRFR9220	IRFR9220
IRF642	IRF642	IRF9620	IRF9620	IRFP433	IRFP433	IRFR9222	IRFR9222
IRF643	IRF643	IRF9621	IRF9621	IRFP440	IRFP440	IRFR9210	IRFR9210
IRF710	IRF710	IRF9622	IRF9622	IRFP441	IRFP441	IRFR9212	IRFR9212
IRF711	IRF711	IRF9623	IRF9623	IRFP442	IRFP442	IRFR9120	IRFR9121
IRF712	IRF712	IRF9630	IRF9630	IRFP443	IRFP443	IRFR9110	IRFR9110
IRF713	IRF713	IRF9631	IRF9631	IRFP450	IRFP450	IRFR9111	IRFR9111
IRF720	IRF720	IRF9632	IRF9632	IRFP451	IRFP451	IRFR9020	IRFR9020
IRF721	IRF721	IRF9633	IRF9633	IRFP452	IRFP452	IRFR9022	IRFR9022
IRF722	IRF722	IRF9640	IRF9640	IRFP453	IRFP453	IRFR9010	IRFR9010
IRF723	IRF723	IRF9641	IRF9641	IRFP9130	IRFP9130	IRFR9012	IRFR9012
IRF730	IRF730	IRF9642	IRF9642	IRFP9131	IRFP9131	IRF614	IRF614
IRF731	IRF731	IRF9643	IRF9643	IRFP9132	IRFP9132	IRF624	IRF624
IRF732	IRF732	IRFP131	IRFP131	IRFP9241	IRFP9241	IRF634	IRF634
IRF733	IRF733	IRFP132	IRFP132	IRFP9242	IRFP9242	IRF644	IRF644
IRF740	IRF740	IRFP133	IRFP133	IRFP9243	IRFP9243	IRFP254	IRFP254
IRF741	IRF741	IRFP140	IRFP140	IRFBC30	SSP4N60		
IRF742	IRF742	IRFP141	IRFP141	IRFBC40	SSP6N60		
IRF743	IRF743	IRFP142	IRFP142	IRFP9133	IRFP9133		
IRF820	IRF820	IRFP143	IRFP143	IRFP9140	IRFP9140		
IRF821	IRF821	IRFP150	IRFP150	IRFP9141	IRFP9141		
IRF822	IRF822	IRFP151	IRFP151	IRFP9142	IRFP9142		
IRF823	IRF823	IRFP152	IRFP152	IRFP9143	IRFP9143		
IRF830	IRF830	IRFP153	IRFP153	IRFP9230	IRFP9230		
IRF831	IRF831	IRFP230	IRFP230	IRFP9231	IRFP9231		
IRF832	IRF832	IRFP231	IRFP231	IRFP9232	IRFP9232		
IRF833	IRF833	IRFP232	IRFP232	IRFP9233	IRFP9233		
IRF840	IRF840	IRFP233	IRFP233	IRFP9240	IRFP9240		
IRF841	IRF841	IRFP240	IRFP240	IRFR220	IRFR220		

HITACHI	SAMSUNG Direct Replacement	HITACHI	SAMSUNG Direct Replacement	HITACHI	SAMSUNG Direct Replacement	HITACHI	SAMSUNG Direct Replacement
2SK261	IRF512	2SK382	IRF822	2SK559	IRFP451	2SJ114	IRFP9242
2SK262	IRF613	2SK383	IRF530	2SK560	IRFP450	2SJ117	IRF9612
2SK263	IRF613	2SK399	IRFP142	2SK622	IRFP251	2SJ118	IRFP9241
2SK294	IRF522	2SK400	IRFP242	2SK623	IRFP441	2SJ119	IRFP9240
2SK295	IRF522	2SK402	IRFP342	2SK642	IRFP442	2SJ85	IRF9512
2SK296	IRF612	2SK403	IRFP443	2SK682	IRFP453	2SJ86	IRF9611
2SK309	IRF722	2SK408	IRF612	2SK683	IRFP452	2SJ87	IRF9613
2SK310	IRF710	2SK409	IRF612	2SJ101	IRF9533	2SJ88	IRF9610
2SK311	IRF823	2SK412	IRFP353	2SJ102	IRF9533		
2SK319	IRF720	2SK413	IRFP243	2SJ113	IRFP9142		
2SK320	IRF833	2SK414	IRFP242				
2SK345	IRF523	2SK428	IRF543				
2SK346	IRF523	2SK440	IRF630				
2SK349	IRFP342	2SK556	IRFP453				
2SK350	IRFP441	2SK557	IRFP453				

MATSUSHITA	SAMSUNG Direct Replacement	MATSUSHITA	SAMSUNG Direct Replacement	MATSUSHITA	SAMSUNG Direct Replacement	MATSUSHITA	SAMSUNG Direct Replacement
2SK500	IRFP141	2SK627	IRFP151	2SK633A	IRFP252		
2SK501	IRFP342	2SK627A	IRFP151	2SK634	IRFP352		
2SK501A	IRFP441	2SK629	IRFP150	2SK634A	IRFP451		
2SK610	IRFP342	2SK629A	IRFP251	2SK636	IRFP440		
2SK626	IRFP151	2SK633	IRFP252	2SK637	IRFP452		

MOTOROLA	SAMSUNG Direct Replacement	MOTOROLA	SAMSUNG Direct Replacement	MOTOROLA	SAMSUNG Direct Replacement	MOTOROLA	SAMSUNG Direct Replacement
MTH6N55	SSH6N55	MTP10N08	IRF532	MTP2N50	IRF822	MTP5N40	IRF730
MTH6N60	SSH6N60	MTP10N10	IRF532	MTP3N12	IRF623	MTP7N12	IRF633
MTH8N55	SSH8N55	MTP10N12	IRF643	MTP3N15	IRF623	MTP7N15	IRF633
MTH8N60	SSH8N60	MTP10N25	IRF743	MTP3N18	IRF622	MTP7N18	IRF632
MTH7N35	IRFP343	MTP12N05	IRF533	MTP3N20	IRF620	MTP7N20	IRF632
MTH7N40	IRFP342	MTP1N45	IRF823	MTP3N35	IRF721	MTP15N15	IRF643
MTH8N35	IRFP343	MTP1N50	IRF822	MTP3N40	IRF720	MTP20N08	IRF542
MTH8N40	IRFP342	MTP2N18	IRF612	MTP3N55	SSP4N55	MTP20N20	IRF542
MTH15N18	IRFP242	MTP2N20	IRF612	MTP3N60	SSP4N60	MTP20N05	IRF541
MTH15N20	IRFP242	MTP2N25	IRF723	MTP4N08	IRF510	MTP25N06	IRF541
MTH20N12	IRFP253	MTP12N06	IRF533	MTP4N10	IRF510	MTD10N05A	IRFR020
MTH20N15	IRFP253	MTP12N08	IRF532	MTP4N12	IRF623	MTD4P05	IRFR9020
MTH25N08	IRFP140	MTP12N10	IRF532	MTP4N15	IRF623	MTD5N05A	IRFR010
MTH25N10	IRFP140	MTP12N18	IRF642	MTP4N45	IRF833	MTH6N60	SSH6N60
MTH35N05	IRFP151	MTP12N20	IRF642	MTP4N50	IRF832	MTP10N05	IRFZ10
MTH35N06	IRFP151	MTP15N05	IRF543	MTP4N45	IRF833	MTP16N05A	IRFZ42
MTP8N08	IRF520	MTP15N06	IRF543	MTP5N05	IRF523	MTP6N60	SSP6N60
MTP8N10	IRF520	MTP2N35	IRF723	MTP5N18	IRF620		
MTP8N12	IRF633	MTP2N40	IRF722	MTP5N20	IRF620		
MTP8N15	IRF633	MTP2N45	IRF823	MTP5N35	IRF731		
MTP8N18	IRF632						
MTP8P08	IRF9532						
MTP8P10	IRF9532						
MTP10N05	IRF533						
MTP10N06	IRF533						

RCA	SAMSUNG Direct Replacement	RCA	SAMSUNG Direct Replacement	RCA	SAMSUNG Direct Replacement	RCA	SAMSUNG Direct Replacement
RCA9212A	IRF520	RFP3N45	IRF821	RFP7N45	IRF831	RFP12N10	IRF530
RCA9212B	IRF643	RFP3N50	IRF820	RFP7N50	IRF830	RFP12N20	IRF642
RCA9213A	IRF512	RFP4N05	IRF513	RFP8N18	IRF630	RFP15N05	IRF543
RCA9213B	IRF613	RFP4N06	IRF513	RFP8N20	IRF630	RFP15N06	IRF543
RCA9230A	IRF542	RFP4N35	IRF721	RFP8N08	IRF9532	RFP15N12	IRF643
RFP1N35	IRF713	RFP4N40	IRF720	RFP8N10	IRF9532	RFP18N10	IRF542
RFP1N40	IRF712	RFP5P12	IRF9631	RFP10N12	IRF643	RFP25N05	IRF541
RFP2N08	IRF512	RFP5P15	IRF9631	RFP10N15	IRF643		
RFP2N10	IRF512	RFP6P08	IRF9520	RFP10P12	IRF9532		
RFP2N12	IRF611	RFP6P10	IRF9520	RFP12N08	IRF530		
RFP2N15	IRF611						
RFP2N18	IRF612						
RFP2N20	IRF612						
RFP2P08	IRF9512						
RFP2P10	IRF9512						

2

SGS	SAMSUNG Direct Replacement	SGS	SAMSUNG Direct Replacement	SGS	SAMSUNG Direct Replacement	SGS	SAMSUNG Direct Replacement
SEFH15N18	IRFP240	SEFH35N06	IRFP151	SGSP464	IRFP443	SGSP474	IRFP440
SEFH15N20	IRFP241	SEFH7N45	IRFP441	SGSP465	IRFP342	SGSP475	IRFP340
SEFH25N08	IRFP140	SEFH7N50	IRFP440	SGSP466	IRFP343	SGSP476	IRFP341
SEFH25N10	IRFP140	SGSP421	IRFP143	SGSP467	IRFP242	SGSP477	IRFP240
SEFH35N05	IRFP151	SGSP422	IRFP143	SGSP469	IRFP442	SGSP479	IRFP440
SEFH35N06	IRFP151	SGSP461	IRFP142	SGSP471	IRFP140	SGSP481	IRFP151
SEFH7N45	IRFP441	SGSP462	IRFP142	SGSP472	IRFP150	SGSP482	IRFP151
SEFH7N50	IRFP440	SGSP463	IRFP342	SGSP473	IRFP351	SGSP491	IRFP151
						SGSP492	IRFP151

Siemens	SAMSUNG Direct Replacement	Siemens	SAMSUNG Direct Replacement	Siemens	SAMSUNG Direct Replacement	Siemens	SAMSUNG Direct Replacement
BUZ10A	IRFZ32	BUZ32C	IRF633	IRF42A	IRF833	BUZ67	IRFZ22
BUZ10B	IRF543	BUZ351	IRFP353	IRF42B	IRF820	BUZ71	IRF532
BUZ11	IRF521	BUZ353	IRFP453	BUZ42C	IRF821	BUZ71A	IRF632
BUZ11A	IRFZ42	BUZ354	IRFP453	BUZ48	IRFP450	BUZ72A	IRF820
BUZ14A	IRFZ30	BUZ237	IRFP242	BUZ48A	IRFP452	BUZ73A	IRF820
BUZ20A	IRF530	BUZ38	IRFP240	IRF730	IRF732	BUZ74	IRF822
BUZ20B	IRF532	BUZ382	IRFP353	BUZ60B	IRF733	BUZ74A	IRF720
BUZ201	IRF520	BUZ41A	IRF830	BUZ60C	IRF720	BUZ76	IRF722
BUZ211	IRF540	BUZ41B	IRF831	BUZ60D	IRF330		
BUZ27	IRFP140	BUZ42	IRF832	BUZ64A	IRFP340		
BUZ28	IRFP141						
BUZ31	IRF640						
BUZ32	IRF630						
BUZ32A	IRF631						
BUZ32B	IRF632						

Siliconix	SAMSUNG Direct Replacement	Siliconix	SAMSUNG Direct Replacement	Siliconix	SAMSUNG Direct Replacement	Siliconix	SAMSUNG Direct Replacement
VN40AD	IRF513	VN1000D	IRF530	VN1200D	IRF641	VP1109N5	IRF9512
VN46AD	IRF513	VN1001D	IRF532	VN1201D	IRF643	VP1110N5	IRF9512
VN66AD	IRF513	VN1102N5	IRF523	VN2406D	IRF713	VP1114N1	IRF9233
VN67AD	IRF513	VN1103N5	IRF523	VN3500D	IRF731	VP1114N5	IRF9611
VN88AD	IRF512	VN1104N5	IRF523	VN3501D	IRF733	VP1115N5	IRF9611
VN89AD	IRF512	VN1106N5	IRF523	VN4000D	IRF730	VP1116N5	IRF9612
VN0102N5	IRF513	VN1109N5	IRF522	VN4001D	IRF732	VP1120N5	IRF9612
VN0103N5	IRF513	VN1110N5	IRF522	VN4501D	IRF831	VP1202N5	IRF9533
VN0104N5	IRF513	VN1114N5	IRF611	VN4502D	IRF833	VP1203N5	IRF9533
VN0106N5	IRF513	VN0600D	IRF543	VN5001D	IRF830	VP1204N5	IRF9523
VN0108N5	IRF512	VN0601D	IRF543	VN5002D	IRF732	VP1206N5	IRF9523
VN0300D	IRF513	VN0800D	IRF530	VNS008D	SSP6N60	VP0216N5	IRF9612
VN0330N5	IRF723	VN1202N5	IRF533	VNS009D	SSP5N60	VP0220N5	IRF9612
VN0335N5	IRF723	VN1203N5	IRF533	VP0102N5	IRF9513	VP0335N5	IRF9612
VN0340N5	IRF722	VN1204N5	IRF523	VP0103N5	IRF9513	VP0340N5	IRF9612
VN0345N5	IRF821	VN1206D	IRF613	VP0104N5	IRF9513	VP0345N5	IRF9612
VN0400D	IRF543	VN1206N5	IRF523	VP0106N5	IRF9513	VP1102N5	IRF9523
VN0401D	IRF543	VN1208N5	IRF522	VP0108N5	IRF9512	VP1103N5	IRF9523
VN0109N5	IRF512	VN1209N5	IRF522	VP0109N5	IRF9512	VP1104N5	IRF9513
VN0110N5	IRF512	VN1210N5	IRF522	VP0110N5	IRF9512	VP1106N5	IRF9513
VN0114N5	IRF613	VN1215N5	IRF633	VP0114N5	IRF9613	VP1208N5	IRF9522
VN0116N5	IRF612	VN1216N5	IRF610	VP0202N5	IRF9513	VP1210N5	IRF9522
VN0120N5	IRF612	VN1220N5	IRF610	VP0203N5	IRF9513	VP1215N5	IRF9621
VN0202N5	IRF513	VN1706D	IRF612	VP0204N5	IRF9513	VP1216N5	IRF9610
VN0203N5	IRF513	VN2306N5	IRF541	VP0206N5	IRF9513	VP1220N5	IRF9610
VN0204N5	IRF513	VN2310N5	IRF540	VP0208N5	IRF9512	ZNV0102L	IRF513
VN0206N5	IRF513	VN2315N5	IRF641	VP0209N5	IRF9512	ZNV0106L	IRF513
VN0208N5	IRF512	VN2320N5	IRF642	VP0210N5	IRF9512	ZNV0108L	IRF512
VN0209N5	IRF512	VN2330N5	IRF741	VP0214N5	IRF9613		
VN0201N5	IRF512	VN2335N5	IRF741	VP0215N5	IRF9613		
VN0214N5	IRF613	VN2340N5	IRF740				
VN0215N5	IRF613	VN2350N5	IRF842				
VN0216N5	IRF612	VN1115N5	IRF611				
VN0220N5	IRF612	VN1116N5	IRF612				
VN0810D	IRF532	VN1120N5	IRF612				

TOSHIBA	SAMSUNG Direct Replacement	TOSHIBA	SAMSUNG Direct Replacement	TOSHIBA	SAMSUNG Direct Replacement	TOSHIBA	SAMSUNG Direct Replacement
2SK385	IRFP340	2SK405	IRFP242	2SK643	IRFP441	2SK694	IRFP452
2SK386	IRFP453	2SK447	IRFP351	2SK675	IRFP151	2SJ115	IRFP9242
2SK387	IRFP241	2SK572	IRFP241	2SK678	IRFP450		
2SK388	IRFP351	2SK573	IRFP351	2SK693	IRFP451		

1. AUDIO

1-1 Analog Audio

Application	SAMSUNG	SANYO	TOSHIBA	MATSUSHITA	ROHM	Others
Power Amplifier	KA2201	LA4145		AN7116	BA527	*TBA820M
	KA2212	*LA4140	*TA7313AP	*AN7112	BA526	
	KA8602					MC34119
	KA386		TA7336P		BA546	*LM386/*NJM386
Dual Power Amplifier	KA2206	*LA4182/3	TA7769P	AN7143	BA534	TEA2025
	KA2209	LA4530	TA7376P	AN7118		*TDA2822M
	†KA22103		*TA8210			
	KA2214					*μPC1263C
EQ AMP + Power	KA2213/0	*LA4160	TA7628			
Dual EQ AMP + Power	KA22131	LA4560M			*BA3502F	
	KA22134		*TA8119P			
	KA22135					*LAG637D
	KA22136					*LAG665
EQ AMP + ALC	KA2220	*LA3210	*TA7137P	AN7320	*BA333	μPC1158H
Dual EQ AMP	KA1222	*LA3160	TA7312P			*M51521L
	KA2221	*LA3161	*TA7375P	AN7310	*BA328	*M5152L
	KA22211	*LA3160	TA7312P			*M51521L
Graphic EQ AMP	KA2223	*LA3600	*TA7796P			*M5226P
	KA22233			AN7330K		
	KA22234				*BA3822L	
Dual EQ AMP + ALC	KA2224	*LA3220		AN7312	BA343	
	KA22241	LA3225/6N			*BA3308	M51544L
	KA22242	LA3225/6N			*BA3312N	M51544L
	KA22261		*TA7668BP			
	KA7226		*TA7658P	AN7312	BA343	
	KA2228		*TA7417P		BA3416BL	
Quad EQ AMP	KA22291		TA8189N			M51166P
	††KA22292				BA3422	
Dual EQ AMP + Mute	KA2225	LA3230	*TA7709P/F	AN7315	BA3304	
AM 1 Chip Radio	KA22421		*TA7641BP			*CIC7641
AM/FM 1 Chip Radio	†KA22426					*CXA1019
	KA22427		*TA7613AP			*TDA1083/*ULN2204
	KA22429		*TDA7021T			
AM/FM IF + DET	KA2243				*BA4220	*HA12413

† New Product †† Under Development * Direct Replacement

2

AUDIO (Continued)

Application		SAMSUNG	SANYO	TOSHIBA	MATSUSHITA	ROHM	Others
FM IF + DET		KA2244		*TA7303P	AN278	*BA404	
		KA22441	*LA1140		AN7277	*BA4110	
		KA2245	*LA1150	*TA7130P		*BA403	*μPC1028H
AM Tuner + AM/FM IF + DET		KA2247	*LA1260		AN7223	*BA4260	
		KA22471		*TA7640AP	AN7223		
		KA2248A	LA1270	*TA7687AP		BA4228L	
FM Front End		KA22495	*LA1185	*TA7358AP	*AN7205		
Electronic DC Volume Control		†KA2250		*TC9153			
FM Stereo Multiplex Decoder		KA2261	*LA3361	*TA7604P	*AN7410	*BA1330	*HA11227/*μPC1197C
		KA2263		*TA7343AP	*AN7420		
		KA2264	LA3330	*TA7342P	*AN7421	BA1360	
		KA2265	*LA3410	TA7413AP	AN7470		
Noise Reduction	Dolby B-Type	KA2271		TA7719P			*CXA1101P
		KA22711					*CXA1163
		KA22712					*CXA1102
	FM N.C.	KA2272	*LA2110				
LED Level Meter Driver		KA2281		*TA7666P			IR2E27
		KA2284	*LB1403	TA7366P	*AN6884	*BA6124	
		KA2285	*LB1423	TA7366P		*BA6137	
		KA2287	*LB1413			*BA6125	
		KA2288					*IR2E02
AM/FM Tuner		††KA2297		*TA2003			
AM/FM 1 Chip Tuner + FM MPX		KA2292		*TA8167/27			
		KA2293		*TA8122			
		††KA2295	LA1830				
AM/FM 1 Chip Tuner + FM MPX + N.C.		††KA2296	*LA1883				
Audio Processor		††KA22293					
DC Motor Speed Controller		KA2401					*μPC1470H
		KA2402	*LA5521D		AN6612		
		KA2404			AN6610		μPC1470H
		KA2407			*AN6651		

† New Product †† Under Development * Direct Replacement

1-2 Digital Audio

Application		SAMSUNG	SANYO	TOSHIBA	SONY	HITACHI	Others
CDP	RF Amp	KA9201		TA8137	*CXA1081		
		†KA9201Q			*CXA1271		
	Digital Signal Processor	KS5990	LC7860K	TC9200F	CXD1130		
		KS5991			CXD1247		
		†KS9210		TC9221F	*CXD1167		
		†KS9211			CXD1130		
		††KS9283	LC7865	TC9236	CXD2500		
	Servo Signal Processor	KA8309		TC9201	*CXA1082		
		†KA9221			*CXA1272		
	RF Amp + SSP	††KA9220	LA9210	TA8191		HA12158	
	DSP + DAC	††KS9282				HD49220	
	D/A Converter	KDA0316	*LC7881	TC9218	*CXD1161		
		††KDA0317	LC7883	TC9239			MN6623B
		††KDA0318					CS4328
	Motor Driver	KA9256		*TA7256			
		KA9257					*BA6290
		††KA9258					*BA6296
LDP	VSP	†KA9410				*HA11528	
	SSP	††KA9420				*HA11529	
	TBC Servo	†KA9430				*HD49403	
	ASP + CX NR	††KA9401				HA12127	
	PDP	†KA9402P					IS1603
	CCD Clock driver	†KA9490					
μ-Com		†KS55C232	LC7230	TC9302			μPD1719
		KS56C820			CXP5024		

† New Product †† Under Development * Direct Replacement

2

2. VIDEO

2-1 TV Only

Application	SAMSUNG	SANYO	MATSUSHITA	TOSHIBA	HITACHI	NEC	Others
SIF System	KA2101	*LA1365	*AN240	*TA7176	*HA1125	μPC1382	*ULN2165N
SIF Subsystem For MPX	KA2105		AN5215	*TA7337			
SIF + Audio Output	KA2102A		AN5250	TA7243	HA1364	*μPC1353C	
Sound Mute	KA2103L						
VIF System	KA2911	LA1357	AN5111	*TA7607	HA11225	μPC1356	*TDA2544
	KA2916			*TA7611			
	KA2912	LA7507				*μPC1366	
VIF + SIF + DEF	KA2915		*AN5151N				
NTSC Chroma/ Deflection	KA2153			*TA7644BP		μPC1401C	*IROPO4
PAL Chroma/ Deflection	KA2154			*TA7698			
Vertical System	KA2130A	*LA1385		*TA7242		*μPC1031H2	
	KA2132						*TDA1044U
Vertical Output	KA2131	LA7830	*AN5512			μPC1378H	
Horizontal System	KA2135		*AN5790N				
Deflection System	KA2133					*μPC1379	
	KA2134		*AN5436				
	†KA2138	*LA7851					
Sync. Separator	KA2605						
	KA2606						
DC Volume & Tone Control	KA2107		*AN5836	TA7630P			
NTSC 1 Chip System	††KA2160	LA7670		TA8725			
PAL/NTSC 1 Chip System	††KA2161			TA8690			

† New Product †† Under Development * Direct Replacement

2-2 VCR Only

Application	SAMSUNG	HITACHI	NEC	TOSHIBA	SANYO	Others
Read/Write Amplifier	KA8112				*LA7320	
	††KA8116				LA7372	
Luminance Signal Processor	KA8113				LA7323	
Y/C 1 Chip	††KA8111				*LA7384A	
Chrominance Signal Processor	KA8104		*μPC2315CA			
	†KA8114					BA7107S
	††KA8115				*LA7333	
	††KA8117					
Audio Processor	KA2983					*BA5102
	KA8401					*BA7751LS
	††KA8406					
Servo Controller	KA8316	*HD49748				
	KA8317	*HD49750				
	KA8319					
	†KA8320					
Motor Driver	KA8301					*BA6209
	KA8304					*BA6411
	KA8306			TA7288		
	KA8310					*M51721ATL
	†KA8311					*M52440ASP
RF Modulator	KA2981			TA7673		
	††KA2982					
	††KA2990	HA11560				

† New Product †† Under Development * Direct Replacement

2

2-3 General Purpose for Video

Application		SAMSUNG	SANYO	MATSUSHITA	TOSHIBA	HITACHI	NEC	Others
VIF + SIF System		KA2913A			*TA7678		*μPC1414	
		KA2914A			*TA7680		μPC1411C	
		KA2917						
		KA2919	*LA7520					
		KA2922	*LA7535					
		KA2923	*LA7530N					
Quisi-IF		†KA2924			*TA8796N			
A/V Switch		KA2186						*TEA2014
		KA8402			*TA7347P			
		KA8403			*TA7348P			
PLL + Prescaler	NTSC	KA2185			*TD6359P			
	PAL	†KA2187			*TD6358			
Remocon	Tx	KS5803A					*μPD1913C	
		KS5803B					*μPD1943G	
		KS5410			*TC9012F			
	Rx Pre-Amp	KA2181					*μPC1373H	
		KA2183					μPC1374H	
		KA2184						*CXA20106A
Character Generator		KS5512						*M50554
		†KS5513						Original
Sound MPX	Two Carrier System in Korea	KA2268						
		KA22682						

† New Product †† Under Development * Direct Replacement

3. TELECOMMUNICATION ICs

3-1 Telephone ICs

A. Dialer

Application	SAMSUNG	UMC	HMC	WINDBOND	SHARP	MOSTEK	Others
Pulse Dialer	KS5851 KS5852 KS5853	UM9151 UM9151 UM9151-3	*HM9100A1 *HM9100C1 *HM9100B1	WE9102 WE9104		MK50981	
DTMF Dialer	KS5808 KS5809 KS5810/1 KA2413	*UM95089 UM95087 UM95088	HM9187A	WE9187	*LR4089 LR4087	*MK5089 MK5087 MK5380	*SBA5089 SBA5091 SBA5099 *PBD3535
DTMF/Pulse Switchable with Redial	KS58002 KS58006 ††KS58008	*UM91230C *UM91210C UM91215	HM9102 HM91510	WE9140A WE9140B	LR48081A LR48082A	MK5370	*S7230A/B S7235
DTMF/Pulse 3 No Emergency Dialer	†KS58505		HM9104 HM91550	WE91462-7 WE9146	LR4807A		C/C9146 LC3073
DTMF/Pulse Switchable 10 No Memory	†KS58500 †KS58503 †KS58514	*UM91261 *UM91260C UM91260A	HM91620 HM9110B HM91620A	WE9142 WE91446	LR4803	MK5735	S7240 TP5660
DTMF/Pulse Switchable 15 No Memory	†KS58527	UM91265	HM9114 HM91650	WE9145	LR48211		TC31046
DTMF/Pulse Switchable 20 No Memory	†KS58536	*UM91270	*HM9120	WE9148	LR4806 LR48063		S7241
DTMF Dialer for Micom	KS58015						*TP5088 PCD3311

B. Tone Ringer

Application	SAMSUNG	MOTOROLA	TOSHIBA	ROHM	SGS	CHERRY	Others
Tone Ringer	KA2410 KA2411		*TA31001 *TA31002	*BA6564A BA8205		*CS8204 *CS8205	*IR3N32 *IR3N34
Tone Ringer with Bridge Diode	KA2418 KA2428	MC34012 MC34017			*LS1240 LS3240		

† New Product †† Under Development * Direct Replacement

2

C. Speech Network

Application	SAMSUNG	MOTOROLA	TOSHIBA	ROHM	SGS	PHILIPS	Others
Speech Network	KA2412A			BA8215	LS285/A		WE9185
Low Voltage Speech Network with Dialer Interface	KA2425A	*MC34014		BA6566		TEA1060	U4053/7 U4055/6 TP5700
Speech Network with Dialer Interface	KA8500A KA8501A KA8504		*TA31033P		*LS156 *LS256	TEA1067	U4057B *IR3N31 BA6562
Low Voltage Speech Network	KA8503						*PBL3726/16 U454B
Speak Phone with Speech Network	KA8601	MC34118 + MC34114	TA31050				PBL3786/04
Audio Amp	KA8602	MC34119	TA31056P				

D. Tone Decoder

Application	SAMSUNG	NATIONAL	SHARP	SIGNETICS	Others
Tone Recoder	KA567	*LM567	*IR3N05	*NE567	*XR567 (EXAR)
	KA567L				*XRL567 (EXAR)

E. DTMF Receiver

Application	SAMSUNG	MITEL	GTE	Others
DTMF Receiver	KT3170	*MT8870	*G8870	

3-2 Cordlessphone ICs

Application	SAMSUNG	NATIONAL	SHARP	SIGNETICS	Others
Compander	†KA8507				*TK10651
FM Transmitter	†KA8508	*MC2833			
FM Receiver	KA3361	*MC3361	IR3N06	*MC3361	LM3361
	†KA8509	*MC3362			
PLL	†KS8802	MC145168			

3-3 Exchange ICs

Application	SAMSUNG	N.S.	FAIRCHILD	SGS	INTEL	MOTOROLA	THOMSON
μ-Law 1 Chip CODEC	†KT8554	*TP3054	*μA3054		*2916		*ETC5054
A-Law 1 Chip CODEC	†KT8557	*TP3057	*μA3057		*2917		*ETC5057
TSAC	KT8555	*TP3155					
4 × 4 Crosspoint Switch	KT8592					*MC142100	*CD22100
12 × 8 Crosspoint Switch	KT8593			*M093			

3-4 Interface ICs

Application		SAMSUNG	TI	N/S
RS-232C	Line Driver	KS5788		*DS14C88
	Line Receiver	KS5789A		*DS14C89A
	Transceiver	KA2654		*SN751701

3-5 Driver & Others

Application	SAMSUNG	SPRAGUE	EXAR	MOTOROLA	TI	Others
8 CH Source Driver	KA2580A	*UDN2580A				
	KA2588A	*UDN2588A				
Fluorescent Display Driver	KA2651	*UDN6118	*XR6118			
Peripheral Driver Array	KA2655	*ULN2001		*MC1411	SN75476	
	KA2656	*ULN2002		*MC1412	SN75477	
	KA2657	*ULN2003		*MC1413	SN75478	
	KA2658	*ULN2004		*MC1416		
	KA2659	*ULN2005				
8-Bit Latch & Driver	†KT8518					

† New Product
†† Under Development
* Direct Replacement

4. VOLTAGE REGULATOR

A. 3-Terminal Fixed Positive Voltage Regulator

Description	SAMSUNG	MOTOROLA	NATIONAL	NEC	MATSUSHITA	Package
KA78TXX Series (I_O = 3A)	KA78T05	MC78T05				TO-220
	KA78T06	MC78T06				
	KA78T08	MC78T08				
	KA78T12	MC78T12				
	KA78T15	MC78T15				
	KA78T18	MC78T18				
KA78XX/A/I Series (I_O = 1A)	KA7805	MC7805		μPC7805	AN7805	TO-220
	KA7806	MC7806	LM7806		AN7806	
	KA7808	MC7808	LM7808		AN7808	
	KA7909					
	KA7810					
	KA7811					
	KA7812	MC7812		μPC7812	AN7812	
	KA7815	MC7815		μPC7815	AN7815	
	KA7818	MC7818	LM7818	μPC7818	AN7818	
	KA7824	MC7824	LM7824	μPC7824	AN7824	
KA340XX Series (I_O = 1A)	KA340T05	LM340-5.0	LM340-5.0			TO-220
	KA340T06	LM340-6.0				
	KA340T08	LM340-8.0				
	KA340T09					
	KA340T10					
	KA340T11					
	KA340T12	LM340-12	LM340-12			
	KA340T15	LM340-15	LM340-15			
	KA340T18	LM340-18				
	KA340T24	LM340-24				
KA78MXX Series (I_O = 0.5A)	KA78M05	MC78M05	LM78M05	μPC78M05	AN78M05	TO-220
	KA78M06	MC78M06	LM78M06		AN78M06	
	KA78M08	MC78M08	LM78M08	μPC78M08	AN78M08	
	KA78M10			μPC78M10	AN78M10	
	KA78M12	MC78M12	LM78M12	μPC78M12	AN78M12	
	KA78M15	MC78M15	LM78M15	μPC78M15	AN78M15	
	KA78M18	MC78M18		μPC78M18	AN78M18	
	KA78M20	MC78M20		μPC78M20	AN78M20	
	KA78M24	MC78M24	LM78M24	μPC78M24	AN78M24	
KA78LXXA (I_O = 0.1A)	KA78L05A	MC78L05A	LM78L05			TO-92
	KA78L08A	MC78L08A				
	KA78L09A					
	KA78L10A					
	KA78L12A	MC78L12A	LM78L12			
	KA78L15A	MC78L15A	LM78L15			
	KA78L18A	MC78L18A				
	KA78L24A	MC78L24A				

B. 3-Terminal Fixed Negative Voltage Regulator

Description	SAMSUNG	MOTOROLA	NATIONAL	NEC	MATSUSHITA	Package
KA79XX Series ($I_O = 1A$)	KA7905 KA7906 KA7908 KA7912 KA7915 KA7918 KA7924	MC7905 MC7906 MC7908 MC7912 MC7915 MC7918 MC7924	LM7905 LM7908 LM7912 LM7915	μPC7905 μPC7908 μPC7912 μPC7915 μPC7918 μPC7924	AN7905 AN7906 AN7908 AN7912 AN7915 AN7918 AN7924	TO-220
KA79MXX ($I_O = 0.5A$)	KA79M05 KA79M06 KA79M08 KA79M12 KA79M15 KA79M18 KA79M24	MC79M05 MC79M12 MC79M15	LM79M05 LM79M08 LM79M12 LM79M15			TO-220
KA79LXXA ($I_O = 0.1A$)	KA79L05A KA79L12A KA79L15A KA79L18A KA79L24A	MC79L05A MC79L12A MC79L15A MC79L18A MC79L24A	LM79L05 LM79L12 LM79L15			TO-92

C. 3-Terminal Adjustable Voltage Regulator

Description	SAMSUNG	MOTOROLA	NATIONAL	NEC	Package
Adjustable Voltage	KA317	LM317	LM317	LM317	TO-220
	KA337	LM337	LM337	LM337	TO-220
	KA350	LM350	LM350	LM350	TO-220
	KA317L	LM317L	LM317L		TO-92
	KA317M	LM317M	LM317M	LM317M	TO-220
	KA337L	LM337L	LM337L		TO-92

2

5. POWER SUPPLY CONTROLLER

Description	SAMSUNG	UNITRODE	SGS	MOTOROLA	Other	Package
PWM Controller	KA7500	UC494		TL494	μPC494	16 DIP
	KA3524	UC3524	SG3524			16 DIP
	KA3525A	UC3525A	SG3525A	SG3525A		16 DIP
	KA3526B	UC3526		SG3526		18 DIP
	KA7577				M51977	16 DIP
	KA3842B	UC3842	UC3842	UC3842A	CS3842A	8 DIP/14 SOP
	KA3843B	UC3843	UC3843	UC3843A	CS3843A	8 DIP/14 SOP
	KA3844B	UC3844	UC3844		CS3844A	8 DIP/14 SOP
	KA3845B	UC3845	UC3845		CS3845A	8 DIP/14 SOP
Control IC for SMPS	KA7511		TDA4601	TDA4601		10 SIP
	KA7515				TDA4605	8 DIP
DC-DC Converter Controller	KA34063A			MC34063A		8 DIP

6. VOLTAGE REFERENCE

Description		SAMSUNG	MOTOROLA	N/S	TI	Package
Adjustable Reference (2.5V ~ 36V)		KA431	TL431		TL431	TO-92 8 DIP 8 SOP
Reference	5V	KA336-5.0		LM336-5.0		TO-92
	2.5V	KA336-2.5		LM336-2.5		TO-92

7. OPERATIONAL AMPLIFIER

Description	SAMSUNG	MOTOROLA	NATIONAL	JRC	Others
Single OP Amp	KA741	MC1741	LM741	NJM741	μPC301A
	KA301	LM301	LM301		
	KF351	LF351	LF351		TL081
Dual OP Amp	KA5532			NJM5532	NE5532, RC5332
	KA358/A	LM358/A	LM358/A	NJM358	TA75358
	KA258/A	LM258	LM258/A		
	KA2904	LM2904	LM2904	NJM2904	
	KA1458	MC1458	LM1458	NJM1458	
	KA4558	MC4558		NJM4558	BA4558
	KA9256				TA7256
	KF353	LF353	LF353		TL802
	KF442		LF442		
Quad OP Amp	KA420				OP420
	KA324/A	LM324/A	LM324/A	NJM324	TA75324
	KA224/A	LM224	LM224/A		CA224
	KA2902	LM2902	LM2902	NJM2902	μPC451
	KA348	LM348	LM348		
	KA248	LM248	LM248		
	KA3403	LM3403		NJM340J	μPC3403
	KA3303	MC3303			μPC452
	KF347	LF347	LF347		TL084

8. VOLTAGE COMPARATOR

Description	SAMSUNG	MOTOROLA	NATIONAL	JRC	Others
Single Comparator	KA311 KA710	LM311 MC710C	LM311 LM710C	NJM311	μPC311 MB4001
Dual Comparator	KA393/A KA2903 KA293 KA319 KA219 KA711	LM393/A LM2903 LM293	LM393/A LM2903 LM293 LM319 LM219 LM711C	NJM2903 NJM319	TA75393 μPC277
Quad Comparator	KA339/A KA2901 KA239 KA3302	LM339/A LM2901 LM239	LM339/A LM2901 LM239 LM3302	NJM2901	TA75339 μPC177 CA239 CA3302

9. TIMER

Function	SAMSUNG	MOTOROLA	NATIONAL	SIGNETICS	TI	Others
Single Timer	KA555	MC1455	LM555	NE555	TA75555	
	KS555				TLC555	ICM7555
	KS555H					
Dual Timer	KA556		LM556	NE556	NE555	
	KS556				TLC556	ICM7556
Quad Timer	KA558			NE558		

10. TOY RADIO CONTROL ACTUATOR

Function	SAMSUNG	TOSHIBA	NATIONAL	MATSUSHITA	NEC	Others
Toy Radio Control Actuator	KA2303					3 Function (RX)
	KA2305					3 Function (Rx)
	KA2309	TA7657P				7 Function (RX)
	KA2310	TA7333P				7 Function (Tx)
	KA2311					7 Function (Rx)
	KA2312	TA7333P				7 Function (Tx)
	KA2314					7 Function (Tx)

11. MISCELLANEOUS ICs

Function	SAMSUNG	NATIONAL	NEC	Others
Voltage Stabilizer for Electronic Tuner	KA33V		μPC574J	
V/F Converter	KA331	LM331		RC4151
Earn Leakage Detector	KA2803			M54123
	KA2807	LM1851		
Zero Voltage SW	KA2804		μPC1701C	
3.3V Voltage Detector	KA7533			KIA7033P
Lead Battery Charge Controller	KA7560			AN8360NK
Power Factor Controller	KA7514			SG3561

1. A/D + D/A Converter

Application	SAMSUNG	N.S.	TI	Intersil	ITT	Remark
A/D + D/A Converter	KSV3110				UVC3130	Functional Replacement

2. A/D Converter

Application	SAMSUNG	SONY	TI	Intersil	Other	Remark
High Speed A/D	KSV3208 (8-bit)					
	KAD0206 (6-bit)				MB40576	Functional Replacement
	†KAD0228 (8-bit)	CXD1175				

3. D/A Converter

Application	SAMSUNG	MATSUSHITA	FUJITSU	SANYO	TRW	Remark
High Speed D/A	KDA3310 (10-bit)				TDC1016	Functional Replacement
	KDA0406 (6-bit)					
	†KDA0408 (8-bit)		MB40978			
Digital Audio	KDA0316			LC7881		
	††KDA0317	MN6623B				Functional Replacement

† New Product

4. DMM Converter

Application	SAMSUNG	N.S.	OKI	Intersil	Other	Remark
3 3/4-Digit A/D	†KAD7000					Original
	†KAD7001		MSM6306			

† New Product

5. RAM DAC

Application	SAMSUNG	BROOKTREE	INMOS	MUSIC	A.D.	OAK	Remark
PC & VGA	KDA0471	Bt471	—	—	ADV471	—	
	KDA0476	Bt476	IMSG171	TR90C1710	ADV471	OTI036	
			IMSG176			OTI066	
	KDA0478	Bt478	IMSG178	—	ADV478		
Note Book PC	††KDA0475	Bt475	IMSG176L	—	ADV475	—	
	††KDA0477	Bt477	—	—	ADV477	—	
Work Station	††KDA0458	Bt458	—	—	ADV458	—	
Special Graphic	††KDA0473	Bt473	—	—	—	—	

†† Under Development

1. TIMEPIECE (WATCH/CLOCK)

Application	SAMSUNG	OKI	EUROSIL	SANYO	UMC	Other
LCD Watch	KS5120/KS5199A	MSM5001N	e1325B		UM3219	STP3691
	KS5195	MSM5004				
	KS5191	MSM5006			UM3217	
	KS5112					JT6649A
	KS5121					Original
Analog LCD Watch	KS5113	MSM5008	e1331		UM3210	STP5721
Analog Watch	KS5243	MSM6002	e1218		UM3230	STP5490
Analog Clock	†KS5223					Original
	†KS5224					Original
Analog Melody Clock	†KS5213					SM5543 PT2601

2. CALCULATOR

Application	SAMSUNG	SHARP	TOSHIBA	UMC	EUROSIL	Other
Basic Function	KS6225				e3143	
	KS6325	LI3135		UM3128		
	†KS6525	LI3330				
	KS6326	LI3140		UM3135	e3142	
	KS6129					Original
	†KS6429	LI3160				
Desk Top	KS6027/KS6077 ††KS6078		T6899			
Scientific	KS6042		SC6992			

† New Product
†† Under Development

3. DATA BANK

Application	SAMSUNG	SHARP	TOSHIBA	UMC	Other
Simple Function	KS6033				Original
Multi Function	†KS6035				Original

4. MELODY

Application	SAMSUNG	OKI	SEIKO	TOSHIBA	ERSO	Other
Simple Melody	KS5310		SVM7952			
	KS537/KS5327					UM66T
Multi Melody	KS5381	MSM5041				
Dual Tone Melody	KS5328		SVM7960			
	†KS531					RTS99T
	†KS5321					RTS995
Sound Effect	KS5814					MN6223
	KS5401					HT-88

5. SPEECH SYNTHESIZER

Application	SAMSUNG	OKI	SEIKO	TOSHIBA	Others
Voice Synthesizer	KS5917			T6668	UM5101
	KS5912			T6667	UM5000
	KS5915			TC8831F	
	†KS5914			TC8801N/F	μPD7756
	†KS5919			TC8832F	
	††KS5916	MSM6376		TC8830AF	
	††KS5921	MSM6258		TC8833F	

† New Product
†† Under Development

LCD PRODUCTS

Application	SAMSUNG	HITACHI	OKI	SHARP	SEIKO EPSON	SANYO
LCD 40 CH. Driver	KS0065	*HD44100H	MSM5259GS	LH5006A	—	LC7930
LCD Driver/ Controller	KS0066	*HD44780 HD66780	*MSM6222B	LH5008	*SED1278F	
LCD 80 CH. Driver	KS0063	HD66100	—	—	—	
LCD 80 CH. COM/SEG Driver	KS0083	HD66106F	—	*LH5022	—	
68 CH. Common Driver (P-Well)	KS0103	HD61203	*MSM5298	LH5030 LH5031	SED1190F SED1191F	
80 CH. Segment Driver (P-Well)	KS0104	HD61104 HD61104A	*MSM5299	LH5826 LH5025A LH5036A	SED1180F SED1181	
32 CH. Common Driver	KS0105	*HD44105C	MSM5238			
50 HC. Segment Driver	KS0106	*HD44102C				
LCD Driver & Controller	KS0068 (Original)	—	—	—	—	—

* Direct Replacement

1) Standard MPR

AMD	SAMSUNG
AM5380	KS53C80
D8237A D8237A-4 D8237A-5	KS82C37A-5 KS82C37A-5 KS82C37A-5
D82C54-8 D82C54-10	KS82C54-8 KS82C54-10
D8255A-2 D8255A-3	KS82C55A-8 KS82C55A-8
D8259A-5 D8259A-8	KS82C59A-8 KS82C59A-8
D8284A-8 D8284A-10	KS82C84A-8 KS82C84A-10
D8288-5	KS82C88A-8

HARRIS	SAMSUNG
82C37A-5 8237A-8	KS82C37A-5 KS82C37A-8
82C52	KS82C52
82C54-8	KS82C54-8
82C55A-5 82C55A-8	KS82C55A-8 KS82C55A-8
82C59A-5 82C59A-8	KS82C59A-8 KS82C59A-8
82C84A-8	KS82C84A-8
82C88-5 82C88-8	KS82C88A-8 KS82C88A-8

INTEL	SAMSUNG
82C37A 82C37A-4 82C37A-5	KS82C37A-5 KS82C37A-5 KS82C37A-5
8255A 8255A-5	KS82C55A-8 KS82C55A-8
82C54A	KS82C54-8
82C55A-8 82C55A-8	KS82C55A-8 KS82C55A-8
82C59A 82C59A-2 82C59A-8	KS82C59A-8 KS82C59A-8 KS82C59A-8
82C84 82C84A 82C84A-1	KS82C84A-8 KS82C84A-8 KS82C84A-10
82C88 8288	KS82C88A-8 KS82C88A-8

LOGIC DEVICES	SAMSUNG
L5380 L53C80	KS53C80 KS53C80

MITSUBISHI	SAMSUNG
82C37A-4 82C37A-5	KS82C37A-5 KS82C37A-5
82C54-6 82C54-8	KS82C54-8 KS82C54-8
82C55A-5 82C55A-8	KS82C55A-8 KS82C55A-8
82C59A-5 82C59A-8	KS82C59A-8 KS82C59A-8

NCR	SAMSUNG
5380	KS53C80

NEC	SAMSUNG
82C37A-5	KS82C37A-5
82C54-8	KS82C54-8
82C55A-8	KS82C55A-8
82C59A-8	KS82C59A-8
82C84A-8	KS82C84A-8
82C88-8	KS82C88A-8

OKI	SAMSUNG
M82C37A-5	KS82C37A-5
M82C54-8 M82C54-10	KS82C54-8 KS82C54-10
M82C55A-8	KS82C55A-8
M82C59A-5 M82C59A-8	KS82C59A-8 KS82C59A-8
M82C84A-5 M82C84A-8	KS82C84A-8 KS82C84A-8
M82C88-5 M82C88-8	KS82C88A-8 KS82C88A-8

UMC	SAMSUNG
UM8237A-3 UM8237A-4 UM8237A-5	KS82C37A-5 KS82C37A-5 KS82C37A-5
UM8250A UM8250B	KS82C50A KS82C50A
UM8254-2	KS82C54-8
UM8255A	KS82C55A-8
UM8259A-5	KS82C59A-8
UM82C84AE-8 UM82C84AE-10	KS82C84A-8 KS82C84A-10
UM82C88-5	KS82C88A-8

2) CHIPSET

(1) Mother B'd

Function	SAMSUNG	C&T	UMC	Others
Integrated Peripheral Controller	KS83C206	P82C206	UM82C206	
Real Time Clock	KS82C6818A			HD146818P MC146818AP HM6818A
386SX 1 Chip	*KS82C310	82C836		VL82C310

(2) Communication IC

Application	SAMSUNG	UMC	Western Digital	ACER	VLSI	TI	Others
Parallel Controller	KS82C411	UM82C11-C		M2201A		TMS77211	82C11 (SIS) PPC1 (paradise)
Two Serial and One Parallel Controller	KS82C452	UM82C452	WD16C452		VL16C452		SIS82C452

3) Graphic

Function	SAMSUNG	TSENG	ATI	Others
VGA	KS82C601	—	ATI28800-5	Acer
	KS82C603	ET3000AX	—	WD90C00
	*KS82C605	ET4000	ATI28800-2	TVGA8900CS

Function	SAMSUNG	ICS	CHRONTEL	Others
Clock Gen	KS82C670	ICS2494	CH9203	AV9114
	KS82C671	ICS1394	CH9201	AV9104

** Under Development

TELETEXT, FAX PRODUCTS

Application	SAMSUNG	ROLM	SEIKO EPSON	KOYCERA	NS	HITACHI
TPH Driver	KS5064	BU2120CH	SED5600 Series	KJT256	—	—
LED Driver	KS5164	D4264 D0B	—	—	—	S6561A
Digital Teletext Processor	TXT4000	—	—	—	SCX6244 QGQ	—

1. DRAM

Density	Org.	Mode	Samsung	Toshiba	Hitachi	Fujitsu	NEC	Oki
256K	×1	F. Page	KM41C256	TC51256	HM51256	MB81256	μPD41256	MSM51C256
		Nibble	KM41C257	TC51257	—	MB81257	—	MSM41257
		S. Column	KM41C258	TC51258	HM51258	MB81258	—	—
	×4	F. Page	KM41C464	TC51464	HM50464	MB81464	μPD41464	MSM41464
		S. Column	KM41C466	TC51466	—	MB81466	—	—
1M	×1	F. Page	KM41C1000	TC511000	HM511000	MB81C1000	μP0421000	MSM511000
		Nibble	KM41C1001	TC511001	HM511001	MB81C1001	μP0421001	MSM511001
		S. Column	KM41C1002	TC511002	HM511002	MB81C1002	μP0421002	MSM511002
	×4	F. Page	KM44C256	TC514256	HM514256	MB81C4256	μP0424256	MSM514256
		S. Column	KM44C258	TC514258	HM514258	MB81C4258	μP0424258	MSM514258
4M	×1	F. Page	KM41C4000	TC514100	HM514100	MB814100	μPD424100	MSM514100
		Nibble	KM41C4001	TC514101	HM514101	MB814101	μPD424101	MSM514101
		S. Column	KM41C4002	TC514102	HM514102	MB814102	μPD424102	MSM514102
	×4	F. Page	KM44C1000	TC514400	HM514400	MB814400	μPD424400	MSM514400
		S. Column	KM44C1002	TC514402	HM514402	MB814402	μPD424402	MSM514402
	×8	F. Page	KM48C512	TC514800A	HM514800	MB814800A	μPD424800	—
	×9	F. Page	KM49C512	TC514900A	HM514900	—	μPD424900	—
	×16	F. Page	KM416C256	TC514170B	HM514170	MB814170A	μPD424170	—
	×18	F. Page	KM418C256	TC514280B	HM514280	—	μPD424280	—
16M	×1	F. Page	KM41C16000	TC5116100	HM5116100	MB8116100	μPD4216100	—
	×4	F. Page	KM44C4000	TC5116400	HM5116400	MB8116400	μPD4216400	—

2. DRAM MODULE

Density	Organization	Samsung	Toshiba	Hitachi	NEC
2M bit	256K × 8(2C)	KMM58256CN	THM82500	HB56025608	—
2.3M bit	256K × 9(3C)	KMM59256CN	THM92500	HB56025609	—
8M bit	1M × 8	KMM581000	THM81000	HB56A18	MC-421000A8
9M bit	1M × 9	KMM591000	THM91000	HB56A19	MC-421000A9
8M bit	256K × 32	KMM532256	THM322500	HB56025632	—
9M bit	256K × 36	KMM536256	—	—	—
16M bit	512K × 32	KMM532512	THM325120	HB56051232	—
18M bit	512K × 36	KMM536512	—	HB56051236	—
20M bit	512K × 40	KMM540512	—	—	—
8M bit	1M × 8(2C)	KMM581000AN	—	HB56G18	—
9M bit	1M × 9(3C)	KMM591000AN	—	HB56G19	—
32M bit	4M × 8	KMM584000	THM84000	HB56A48	MC-424100A8
36M bit	4M × 9	KMM594000	THM94000	HB56A49	MC-424100A9
32M bit	1M × 32	KMM5321000	THM321000	HB56D132	—
36M bit	1M × 36	KMM5361000	THM5361020	HB56D136	MC-421000A36
64M bit	2M × 32	KMM5322000	THM322020	HB56D232	—
72M bit	2M × 36	KMM5362000	THM362020	HB56D236	MC-422000A36
40M bit	1M × 40	KMM5401000	THM401020	HB56A140	—
80M bit	2M × 40	KMM5402000	THM402020	—	—

3. VIDEO RAM

Density	Feature	Org.	Samsung	Toshiba	NEC	Hitachi	TI	Mitsubishi
256K	Minimum Feature	64K × 4	KM424C64		μPD41264 μPD42264	HM53461	TMS4461	M5M4C264
1M	Minimum Feature	256K × 4	KM424C256	TC524256 TC524256A/B	μPD42273	HM534251	TM544C250	
	Extended Feature	256K × 4	KM424C257	TC524258A/B TC524259B	μPD42274	HM534253 HM534252	TMS44C251	M5M442256
	Extended Feature	128K × 8	KM428C128	TC528126A/B TC528128A/B	μPD42275	HM538121 HM538122 HM538123	TMS48C121	M5M482128

4. Static RAM

4.1 Slow SRAM Cross Reference

Density	Org.	SAMSUNG	HITACHI	SONY	TOSHIBA	MITSUBISHI	NEC
64K	8K × 8	KM6264BL/BL-L	HM6264AL/AL-L	CXK5864BL	TC5565AL	M5M5165	μPD4364L/L-L
256K	32K × 8	KM62256AL/AL-L KM62256BL/BL-L	HM62256L/L-L	CXK58257L/L-L	TC55257L	M5M5265	μPD43256AL
512K	64K × 8	KM68512L/L-L	—	—	—	—	—
1M	128K × 8	KM681000L/L-L KM681000AL/AL-L	HM628128L/L-L	CXK581000L CXK581001L	TC551001L	M5M51000	μPD431000L
4M	512K × 8	KM684000L/L-L	HM628512	CXK584000L	TC554001L	M5M5408	μPD434000

4.2 Pseudo SRAM Cross Reference

Density	Org.	SAMSUNG	HITACHI	TOSHIBA	NEC	OKI	MOTOROLA
1M	128K × 8	KM658128/L/L-L	HM658128	TC518128A	μPD428128	MSM548128	MCM518128
4M	512K × 8	KM658512L/L-L	HM658512	TC518512	μPD428512	MSM548512	—

4.3 Fast SRAM

Density	Organization	Samsung	Hitachi	Cypress	Fujitsu	Micron	IDT	Motorola	Toshiba	Sony
64K	16K x 4	KM6465A/AL KM6465B/BL	HM6288/L	CY7C164 CY7C164A	MB81C74	MT5C6404	IDT7188	MCM6288	TC55416	CXK5464
	16K x 4 (With $\overline{OE}$)	KM6466A/AL KM6466B/BL	HM6289/L	CY7C166 CY7C166A	MB81C75	MT5C6405	IDT7189	MCM6290	TC55417	CXK5465
	8K x 8	KM6865B/BL		CY7C186A	MB81C78	MT5C6308	IDT7164	MCM6264	TC5588	CXK5863
256K	256K x 1	KM61257A/AL	HM6207H/L	CY7C197	MB81C81A	MT5C2561	IDT71257	MCM6207		CXK51256
	64K x 4	KM64257A/AL	HM6208H/L	CY7C194	MB81C84	MT5C2564	IDT71258	MCM6208	TC55464	CXK54256
	64K x 4 (With $\overline{OE}$)	KM64258B		CY7C196		MT5C2565	IDT61298	MCM6209	TC55465	
	64K x 4 (Sep. I/O, H-Z)	KM64259B		CY7C191	MB81C86		IDT71282			
	64K x 4 (Sep. I/O, L-Z)	KM64260B		CY7C192			IDT71281			
	32K x 8	KM68257B/BL	HM63832UH/L	CY7C199		MT5C2568	IDT71256	MCM6206	TC55328	CXK58258B
512K	32K x 16	KM616513							TC551632	
1M	1M x 1	KM611001	HM61100A/L	CY7C107		MT5C1001	IDT71027			
	256K x 4	KM641001	HM624256A/L	CY7C106		MT5C1005	IDT71028	MCM6229W		
	256K x 4 (Sep. I/O)	KM641005	HM624257A/L	CY7C101						CXK541000
	128K x 8	KM681001		CY7C108		MT5C1008	IDT71024	MCM6226W		CXK581020

4.4 BiCMOS SRAM

Density	Organization	Samsung	Hitachi	Cypress	Toshiba	Fijitsu	IDT	Motorola
256K	64K x 4(With OE)	KM64B258A	HM6709A	CY7B195	TC55B465		IDT61B298	MCM6709/A
	32K x 8	KM68B257A	HM628325H	CY7B199	TC55B328		IDT71B256	MCM6706/A
288K	32K x 9	KM69B257A			TC55B329			
1M	256K x 4 (Center Power)	KM64B1002			TC55B4256			MCM6728
	256K x 4 (Center Power, with OE)	KM64B1003			TC55B4257			MCM6729
	128K x 8 (Center Power)	KM68B1002			TC55B8128			MCM6726

2

5. EEPROM

5.1 Serial I/O EEPROM

Density	Samsung	N.S.	Exar	Micro Chip	SGSThomson	Catalyst	Rohm	AsahiKasai
256	KM93C06	NM9306		93C46	ST93C06			AK93C06
	KM93C07	NM9307		ER59256				
1K	KM93C46	NM9346	XRM93C46A	93C46	ST93C46T	CAT93C46A	BR93C46	AK93C46
	KM93CS46	NM93CS46			ST93C46		BR93CS46	
	KM93C46V	NM93C46L						
2K	KM93C56	NM93C56	XRM93C56A				BR93C56A	AK93C57
	KM93C57			93C56	ST93C56	CAT36C102		
	KM93CS56	NM93CS56			ST93CS56			
	KM93C56V	NM93C56L					BR93C56B	
	KM93C57V							
4K	KM93C66	NM93C66	XRM93C66B				BR93C66A	AK93C67
	KM93C67			93C66		CAT35C104		
	KM93CS66	NM93CS66			ST93CS66			
	KM93C66V	NM93C66L					BR93C66B	
	KM93C67V					CAT33T104		

5.2 Parallel EEPROM

Density	Samsung	Xicor	Seeq	Exel	Atmel	Hitachi	Oki	Catalyst
16K	KM28C16	X2816B X2816C	DQ2816A DQ5516A	XL2816A	AT28C16		MSM28C16A	CAT28C16A
	KM28C17		DQ2817A DQ5517A	XL2817A	AT28C17			CAT28C17A
64K	KM28C64A	X2864A/B X28C64	DQ28C64	XL2864 XL28C64A	AT28C64	HN58064	MSM28C64A	CAT28C65A
	KM28C65A		DQ28C65 DQ2864	XL2865 XL28C65A		HN58C65/66		CAT28C65A
256K	KM28C256	X28256 X28C256	DQ28C256		AT28C256	HN28C256	MSM28C256	CAT28C256
	KM28C256A	X28256 X28C256	DQ28C256		AT28C256	HN28C256	MSM28C256	CAT28C256
1M	KM29C010				AT29C010			

6. Mask ROM Cross Reference Guide-1

Density	Package	Org.	Samsung	NEC	Hitachi	Toshiba	Sharp	Mitsubishi	Fujitsu	Sony
256K	28 DIP	x 8	KM23C256		HN623257P HN623257PZ HN623258P		LH23255D LH53259D	M5M23256P	MB83256	
	32 SOP	x 8	KM23C256G							
512K	28 DIP	x 8	KM23C512			TC53512CP	LH23512D LH53514D LH53515D		MB83512	
	32 DIP	x 8	KM23C512G							
1M	28 DIP	x 8	KM23C1000	μPD23C1000A	HN62321P HN62321BP HN62331P	TC531000CP	LH231000BD LH531000AD	M5M23C100 M5M231000	MB831000 MB831124	
			KM23C1001	μPD23C1010A	HN62321EP HN62331EP			M5M231001		
	32 DIP	x 8	KM23C1010	μPD23C1001E μPD23C1000EA	HN62321AP HN62331AP	TC531001CP	LH231100BD LH530800D LH530900D			
			KM23C1011							
	32 SOP	x 8	KM23C1010G		HN62321AF HN62331AF	TC531001CF				
			KM23C1011G							
2M	32 DIP	x 8	KM23C2000	μPD23C2001			LH532300D LH532100BD LH532200BD LH532400D		MB832000 MB832001	CXK382001
			KM23C2001							
	32 SOP	x 8	KM23C2000G							
	40 DIP	x 8/ x 16	KM23C2100	μPD23C2000 μPD23C2000A	HN62412P HN62422P		LH532000BD LH532500D			
	44 QFP	x 8/ x 16	KM23C2100FP		HN62412FP HN62422FP					

2

Mask ROM Cross Reference Guide—II

Density	Package	Org.	Samsung	NEC	Hitachi	Toshiba	Sharp	Mitsubishi	Fujitsu	Sony
4M	32 DIP	x8	KM23C4000A	μPD23C4001E	HN62304BP	TC534000P	LH534100BD	M5M23C401AP	MB834000A	CXK384001
					HN62314BP	TC534000AP				
					HN62324BP					
					HN62344BP					
			KM23C4001A				LH534200BD			
							LH534300D			
							LH534400D			
	32 SOP	x8	KM23C4000AG	μPD23C4001E	HN62304BF	TC534000F	LH534100BN	M5M23401AFP		
					HN62314BF	TC534000AF				
					HN62324BF					
					HN62344BF					
			KM23C4001HG				LH534200BN			
	40 DIP	X8/x16	KM23C4100A	μPD23C4000	HN62404P	TC534200P	LH534000BD	M5M23C400AP	MB834100A	
				μPD23C4000A	HN62414P		LH534500D		MB834200A	
					HN62424P					
					HN62444P					
	40 SOP	x8/x16	KM23C4100BG			TC534200F				
	44 QFP	x8/x16	KM23C4100AFP		HN62404FP				MB834200A	
					HN62414FP					
					HN62424FP					
					HN62444FP					
8M	32 DIP	x8	KM23C8000A	μPD23C8001E	HN62308BP		LH538100D	M5M23801P	MB838000	CXK388000
			KM23C8001A				LH538200D			
	32 SOP	x8	KM23C8000AG		HN62308BF			M5M23801FP		
	42 DIP	x8/x16	KM23C8100A	μPD23C8000	HN62408P	TC538200P	LH538000D	M5M23800P	MB838200	
	44 SOP	x8/x16	KM23C8100AG			TC538200F	LH538000N	M5M23800FP		
	44 QFP	x8/x16	KM23C8100AFP1		HN62408FP					
	64 QFP	x8/x16	KM23C8100AFP2				LH538000M		MB838200	
16M	42 DIP	x8/x16	KM23C16000	μPD23C16000	HN624016P	TC5316200P		M5M23160P	MB831620P	
					HN624017P					
			KM23C16100					M5M23168P		
	44 SOP	x8/x16	KM23C16000G		HN624017FB	TC5316200F		M5M23160FP	MB831620PF	
			KM23C16100G					M5M23168FP		
	64 QFP	x8/x16	KM23C16000FP				LH5316000M			
			KM23C16100FP							
32M	42 DIP	x16	KM23C32000							
	44 SOP	x8/x16	KM23C32000G				LH5332000N			
	64 QFP	x8/x16	KM23C32000FP				LH5332000M			

7. FIFO

Capacity	Org.	Samsung	AMD	IDT	Sharp	Cypress	TI
Standard FIFO	512 x 9	KM75C01A	Am7201	IDT7201SA/LA	LH5496/D	CY7C420(1)	74ACT7201A
	1K x 9	KM75C02A	Am7202	IDT7202SA/LA	LH5497/D	CY7C424(5)	74ACT7202
	2K x 9	KM75C03A	Am7203	IDT7203S/L	LH5498/DKM7	CY7C428(9)	
	4K x 9	KM75C04A	Am7204	IDT7204S/L	LH5499/D		

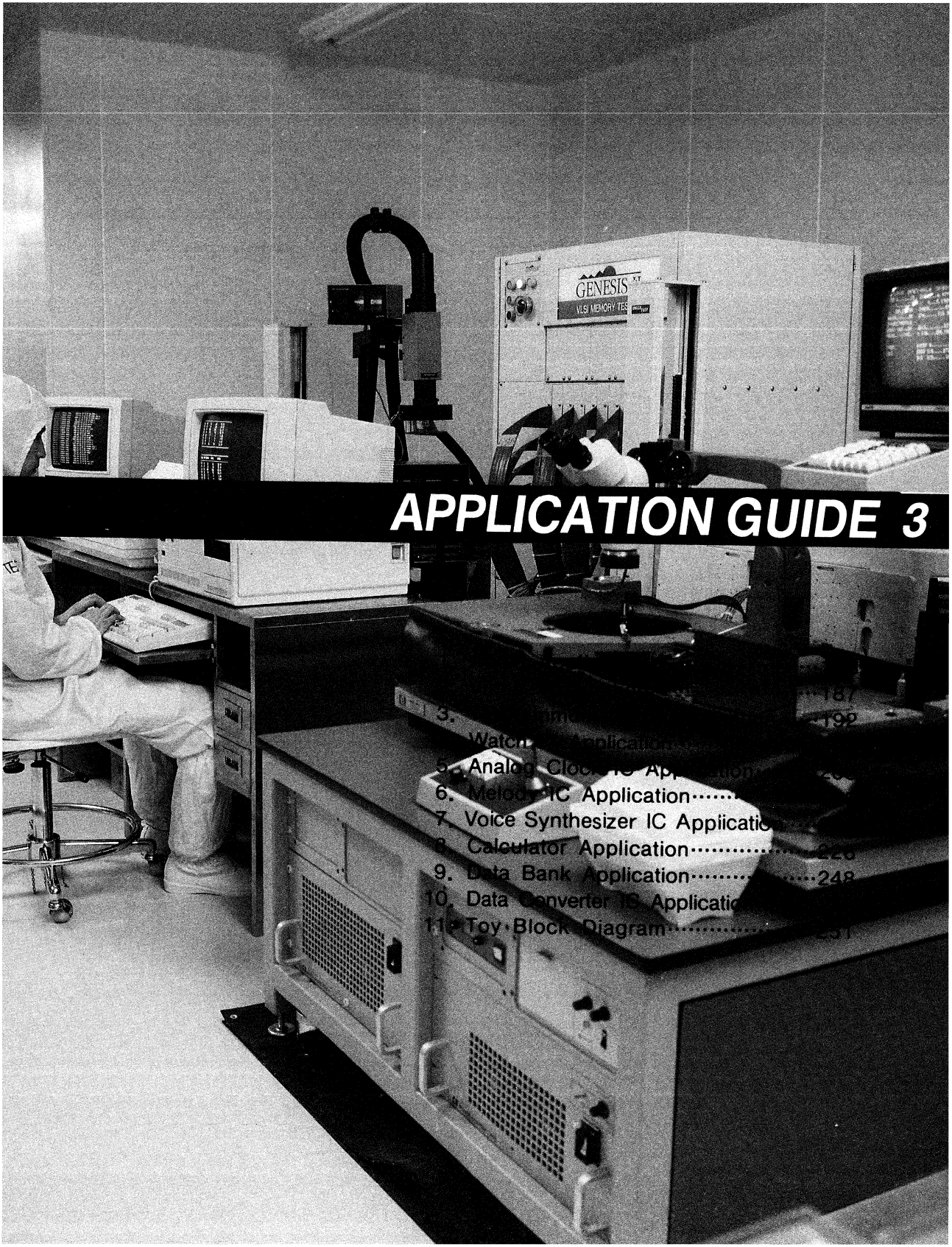

APPLICATION GUIDE 3

1. AUDIO APPLICATION

1.1 Mini Radio Cassette

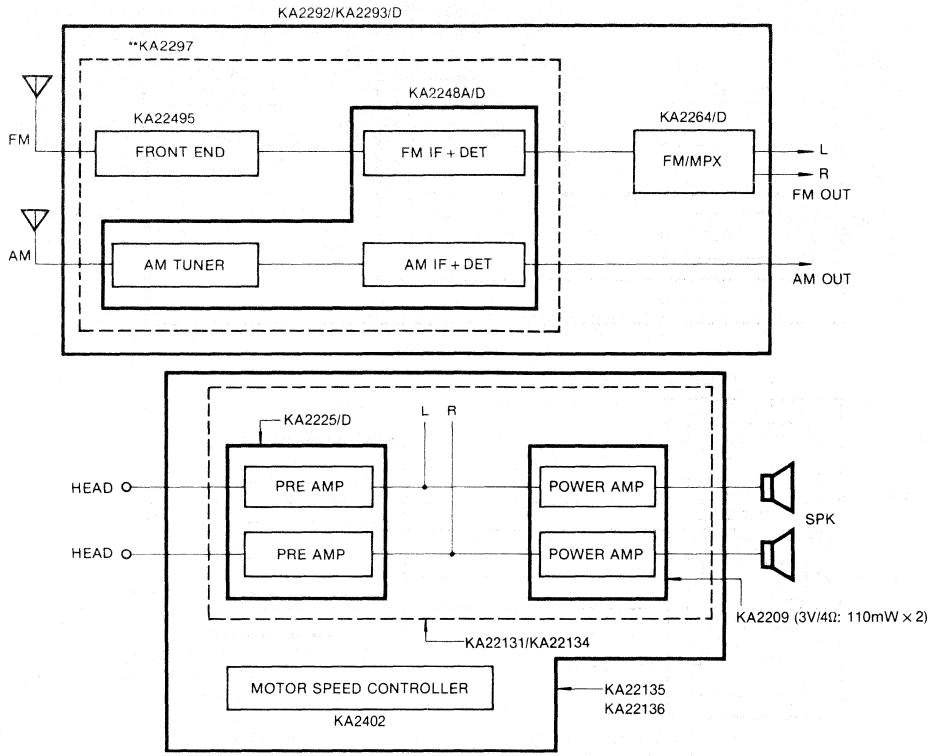

1.2 1 Chip Radio

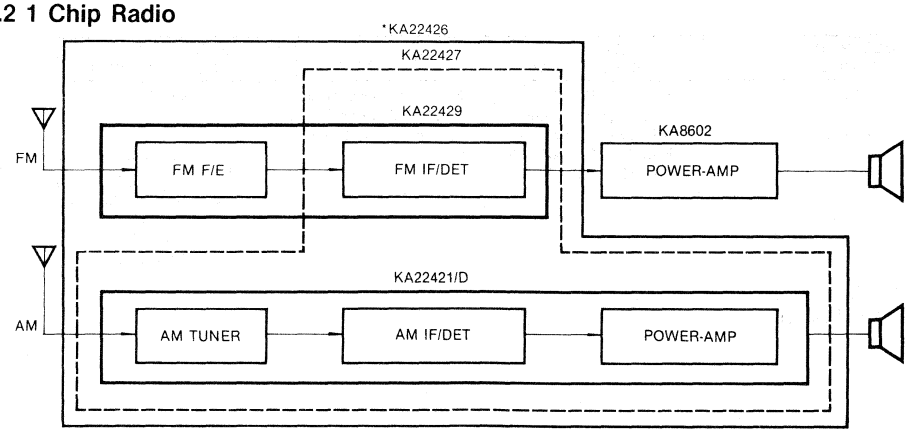

* New Product
** Under Development

1.3 Portable Radio Cassette & Music Center

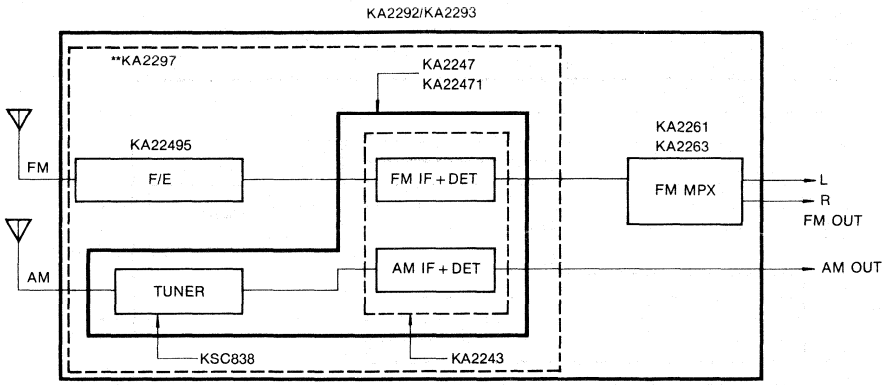

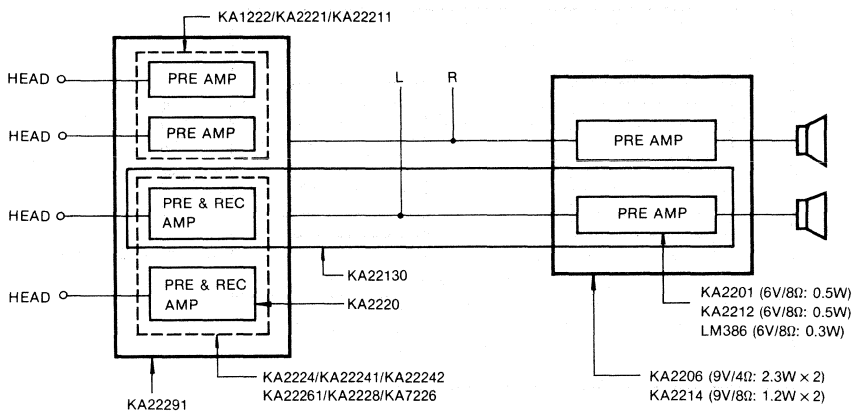

MOTOR SPEED CONTROLLER	LED LEVEL METER DRIVER	GRAPHIC EQ	ELECTRONIC DC VOLUME CONTROL
KA2401 KA2404 KA2407	KA2281 (5 DOT DUAL) KA2284 (5 DOT MONO) KA2285 (5 DOT MONO) KA2287 (5 DOT MONO) KA2288 (7 DOT MONO)	KA2223 (5 BAND MONO) **KA22233 (3 BAND DUAL)** KA22234 (5 BAND DUAL)	KA2250

NOISE REDUCTION
KA2271 KA22711 KA22712

* New Product
** Under Development

1.4 Car Audio

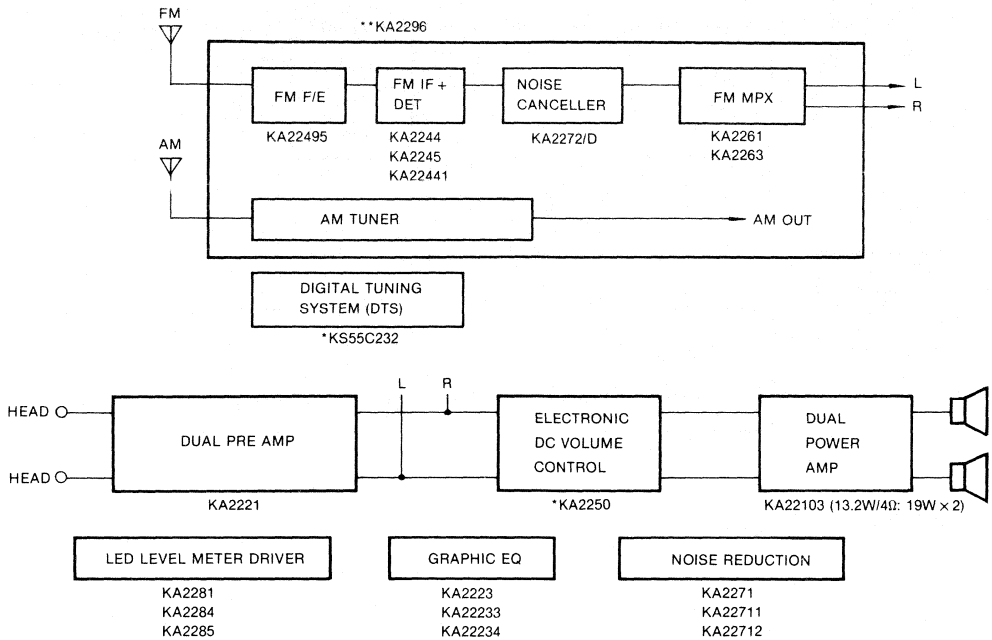

1.5 CDP System

1) Low Voltage CDP System

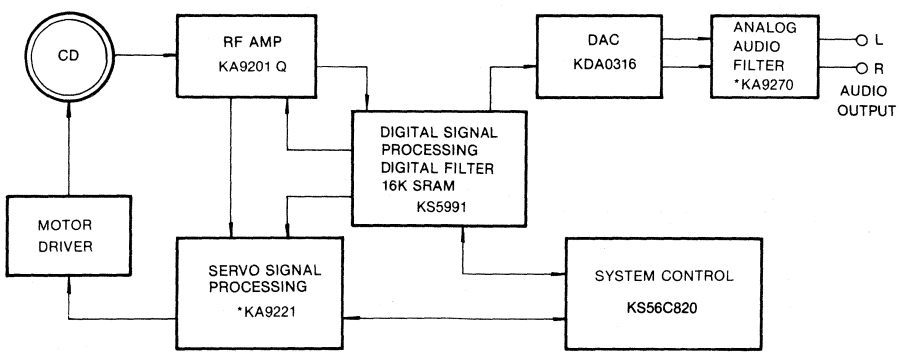

* New Product
** Under Development

2) Portable & Home CDP System

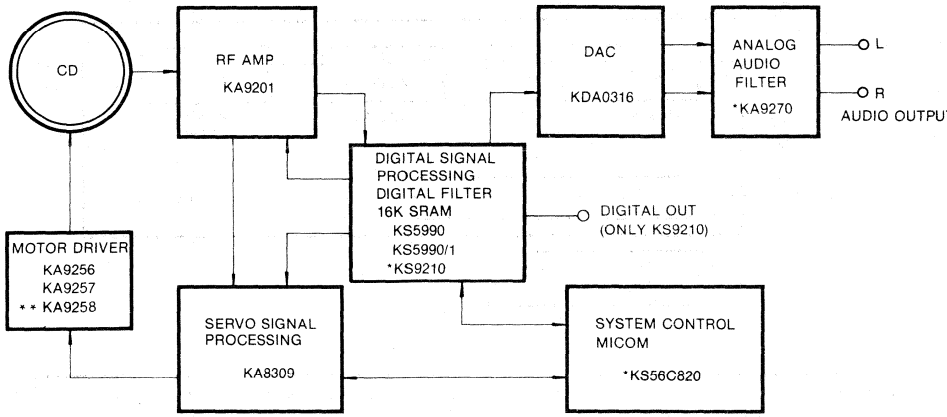

1.6 Laser Disc Player System

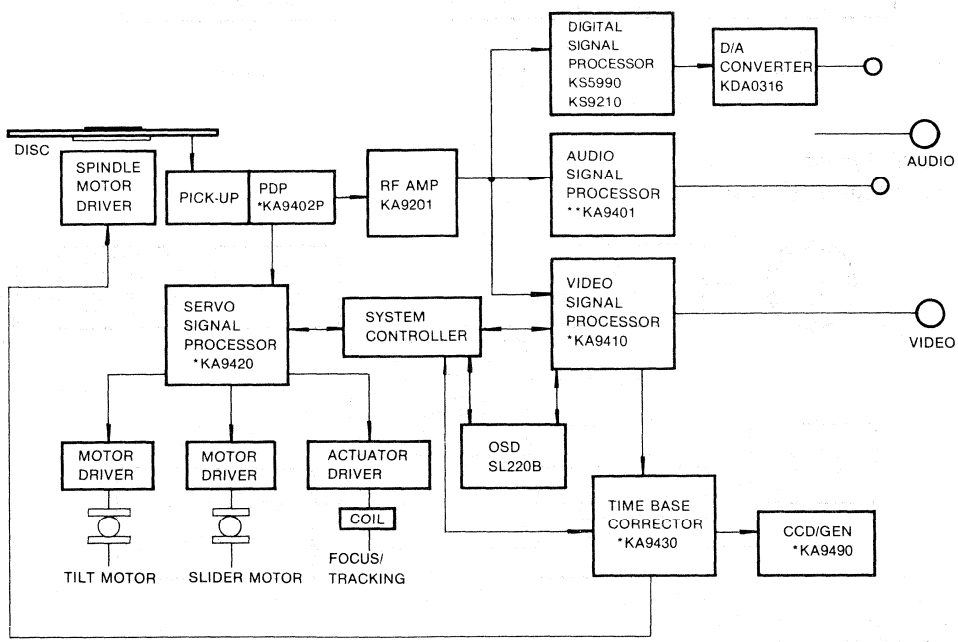

* New Products
** Under Development

2. VIDEO APPLICATION

2.1 Tuner for TV

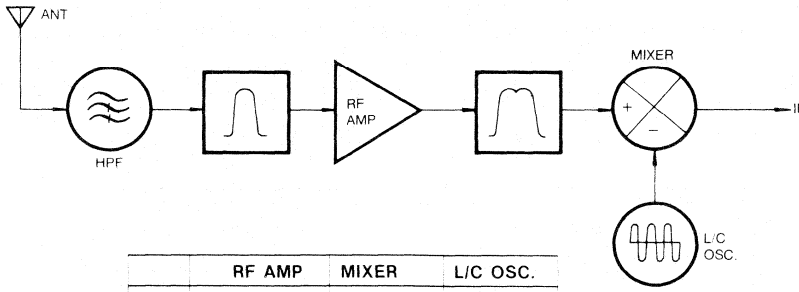

	RF AMP	MIXER	L/C OSC.
VHF	KSC1393 KSC2755 ** K5043	KSC1394 KSC2756 KSC3120	KSC1730 KSC2757 KSC2759
UHF	KSC2758 KSC1070 ** K5044	MPSH24 MPSH20 MMBTH24	KSC3121 KSC3867 MPSH10 MPSH11 MPS5179 MMBTH10

2.2 Linear IC for B/W TV

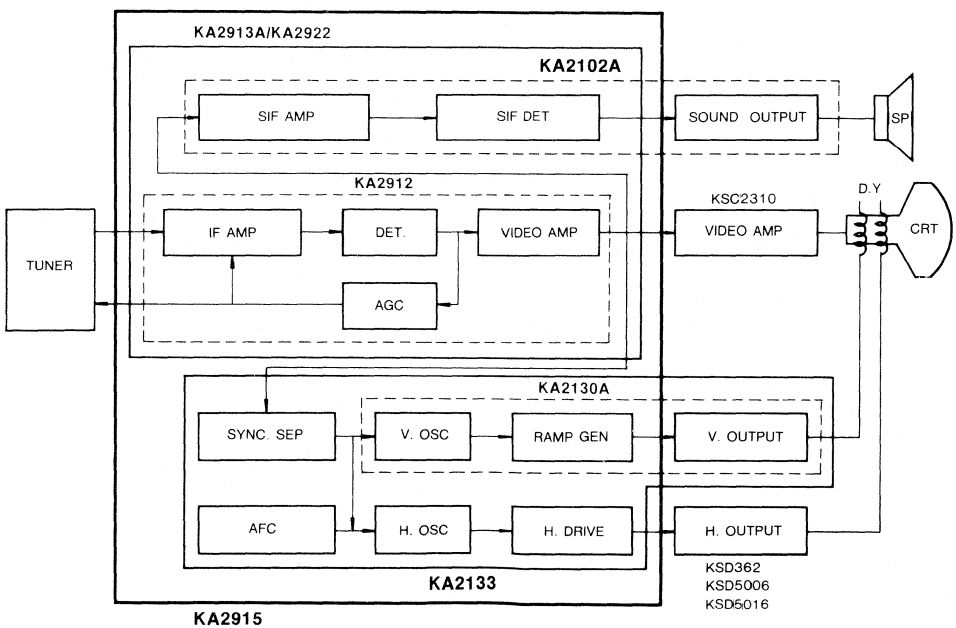

2.3 Linear IC for Monitor

2.3.1 Monochrome Monitor

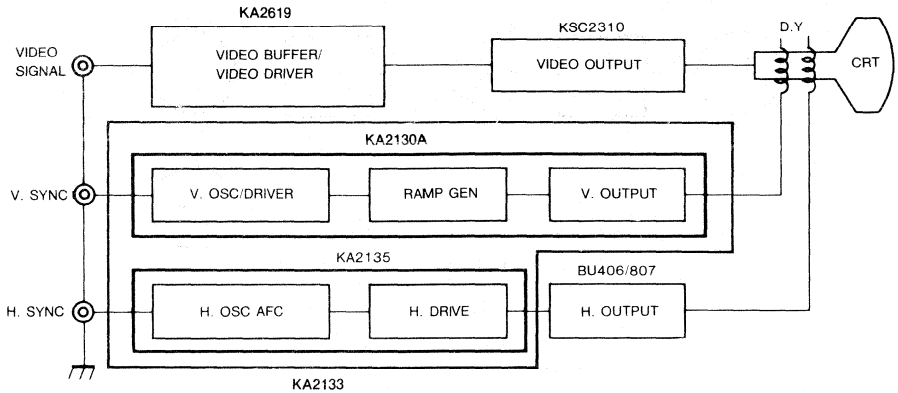

2.3.2 Color Monitor

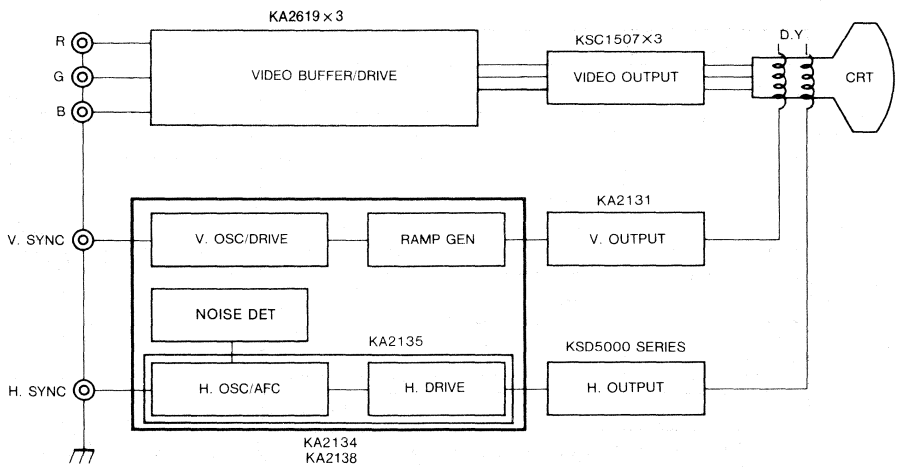

* New Product

2.4 Color Television Block Diagram

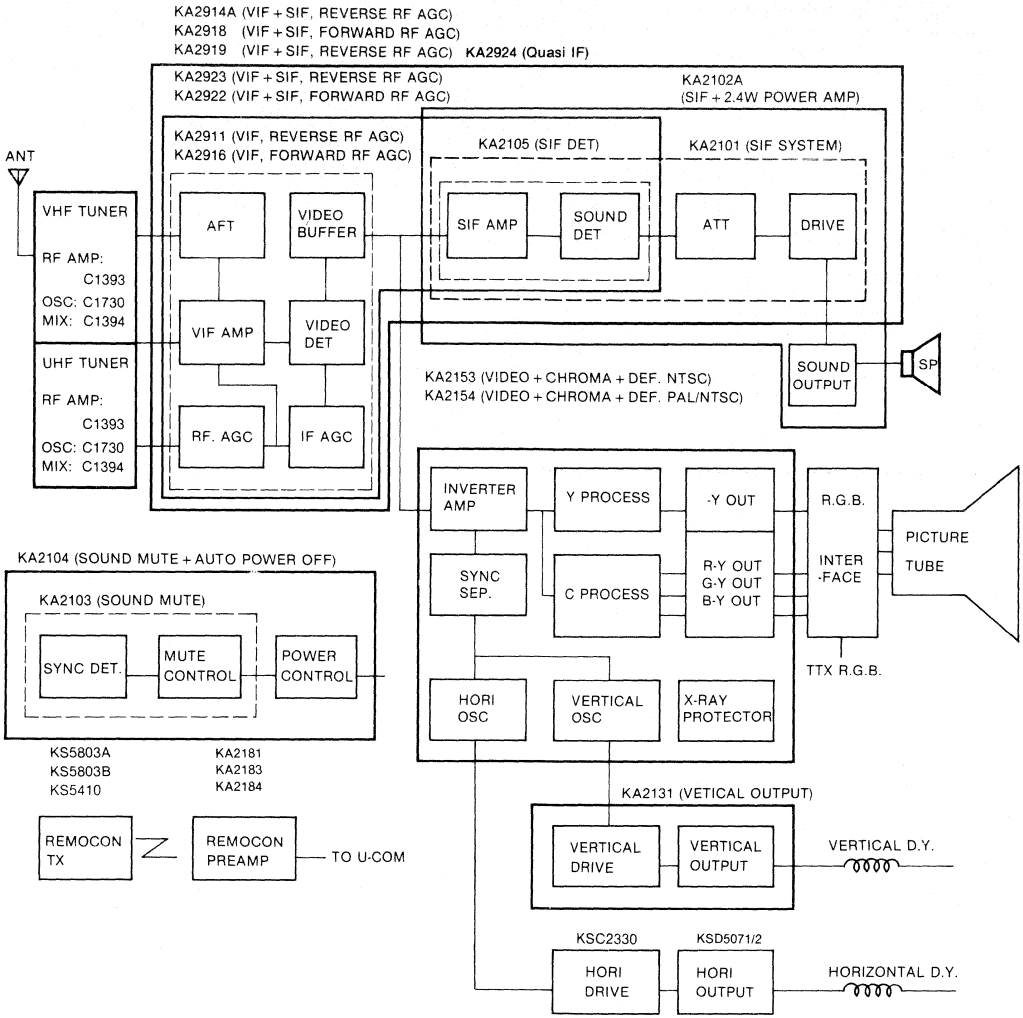

* NEW PRODUCT
** UNDER DEVELOPMENT

3

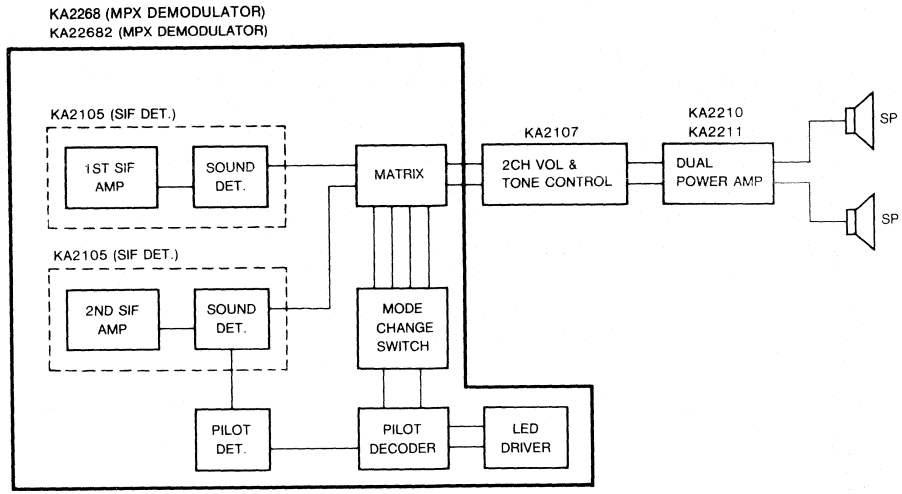
KA2268 (MPX DEMODULATOR)
KA22682 (MPX DEMODULATOR)
KA2105 (SIF DET.)
1ST SIF AMP
SOUND DET.
KA2105 (SIF DET.)
2ND SIF AMP
SOUND DET.
MATRIX
MODE CHANGE SWITCH
PILOT DET.
PILOT DECODER
LED DRIVER
KA2107
2CH VOL & TONE CONTROL
KA2210
KA2211
DUAL POWER AMP
SP
SP

2.5 VTR Application

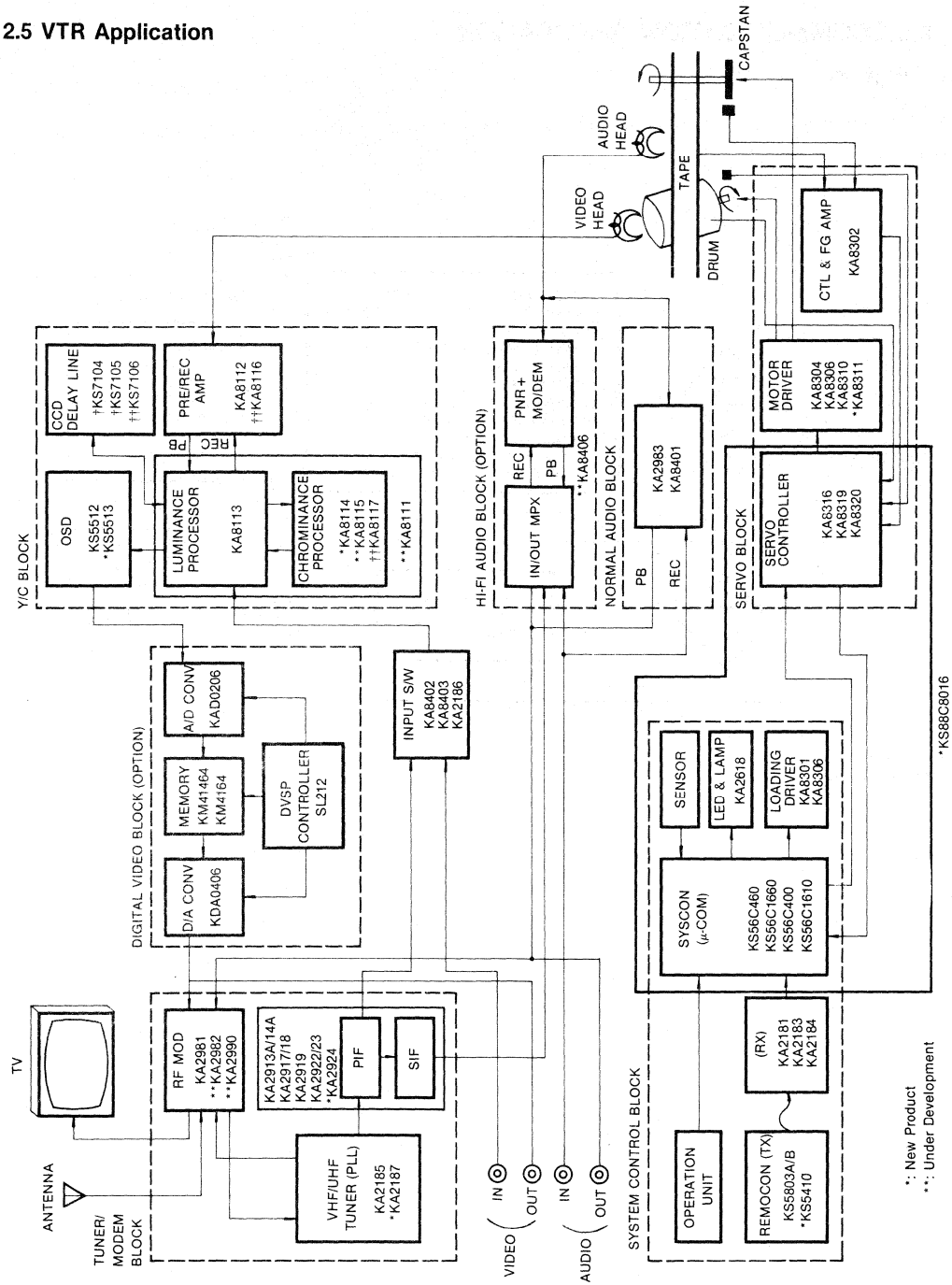

3

3. TELECOMMUNICATION APPLICATION

3.1 Telephone

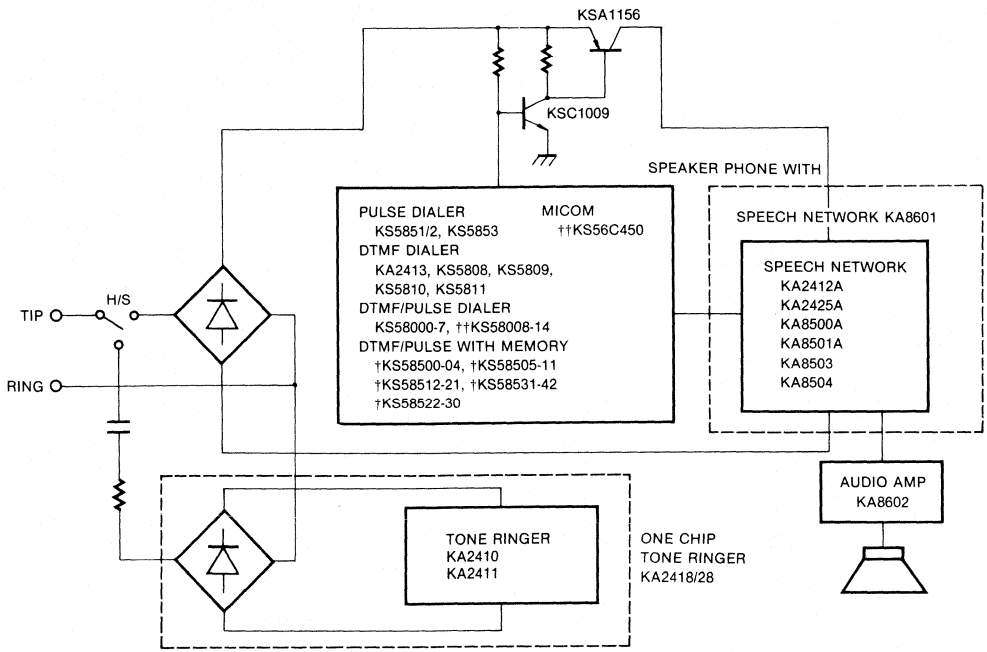

† New Product
†† Under Development

3.2 Cordless Phone

3.2.1 Base Unit

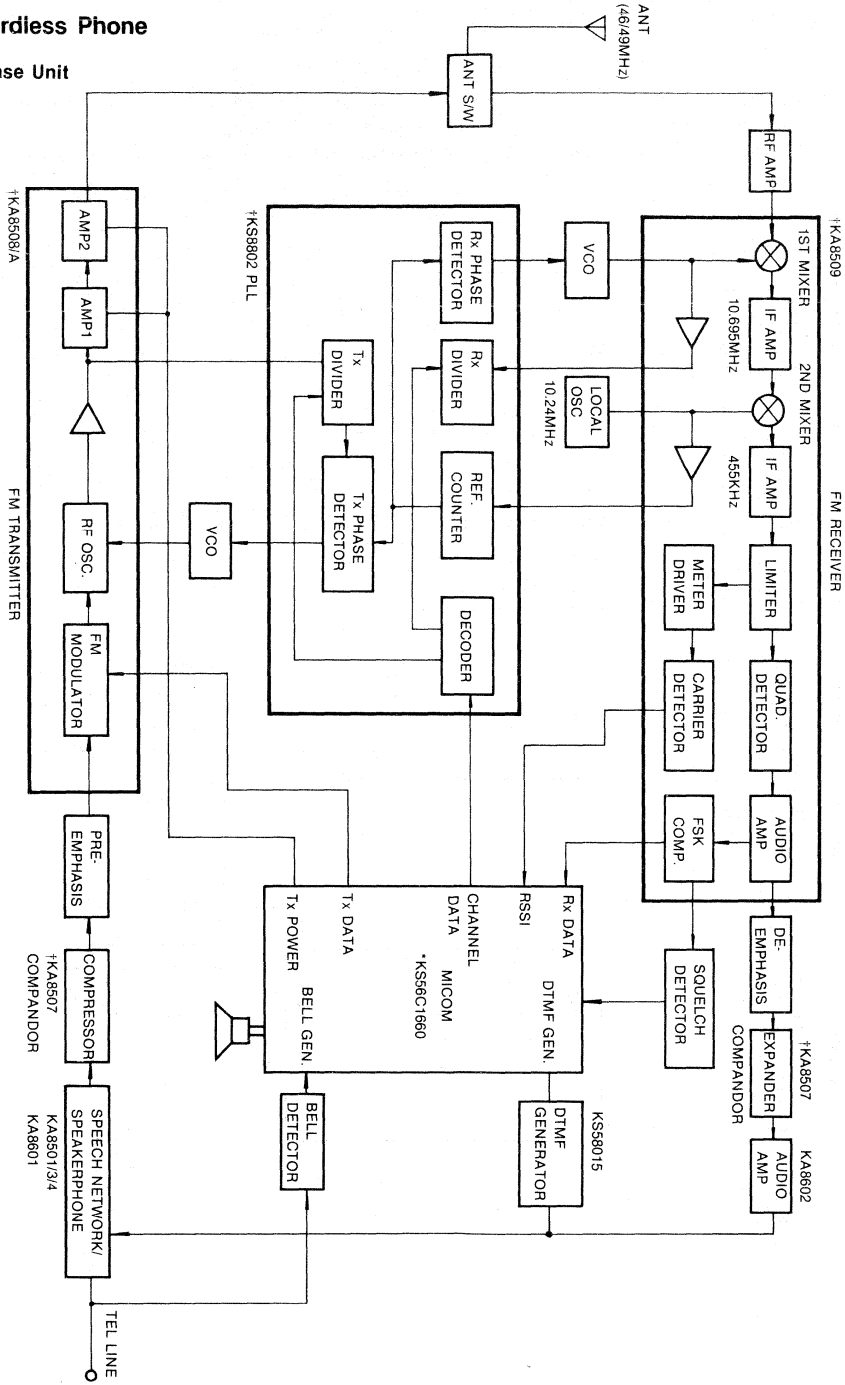

3

3.2.2 Handset Unit

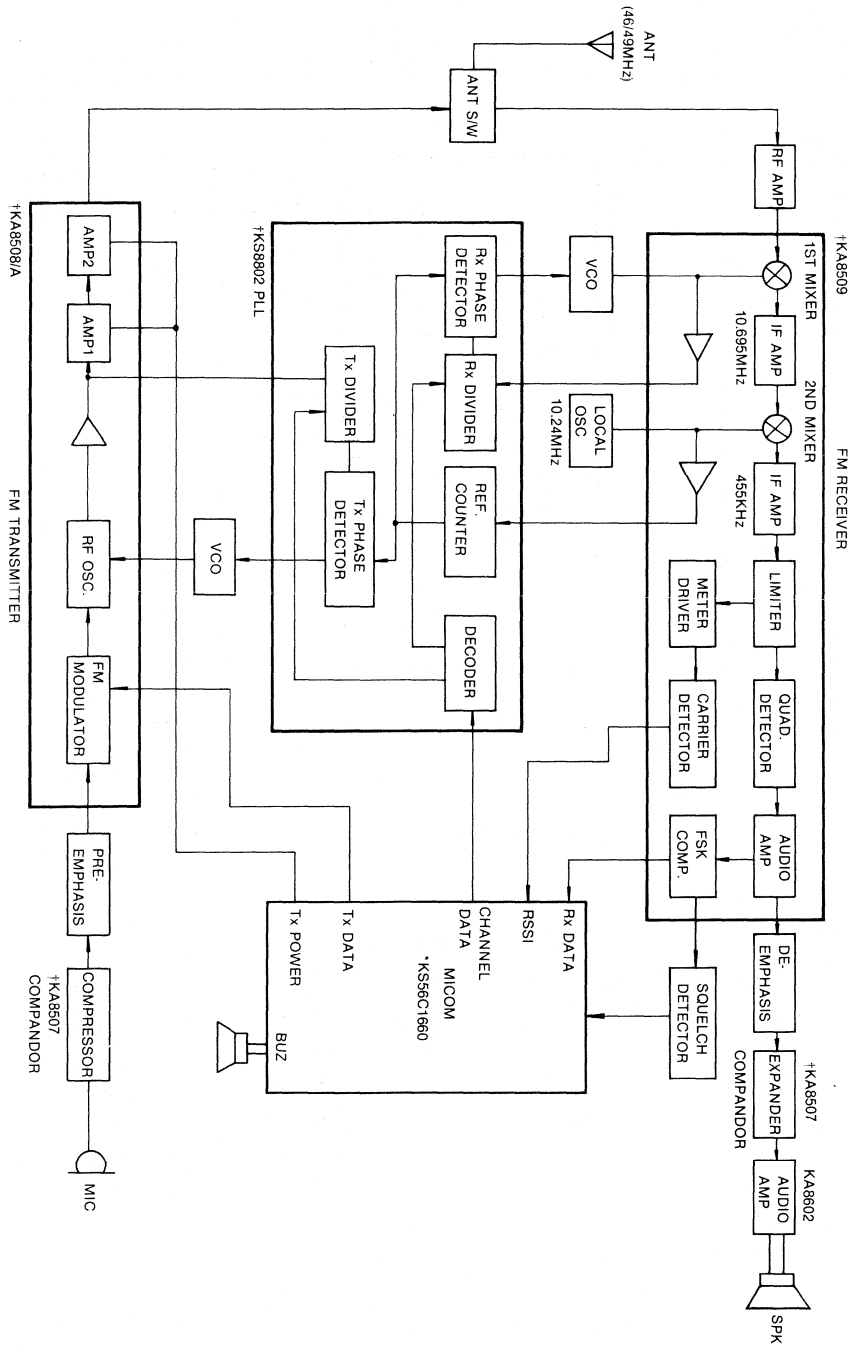

3.3 Exchange

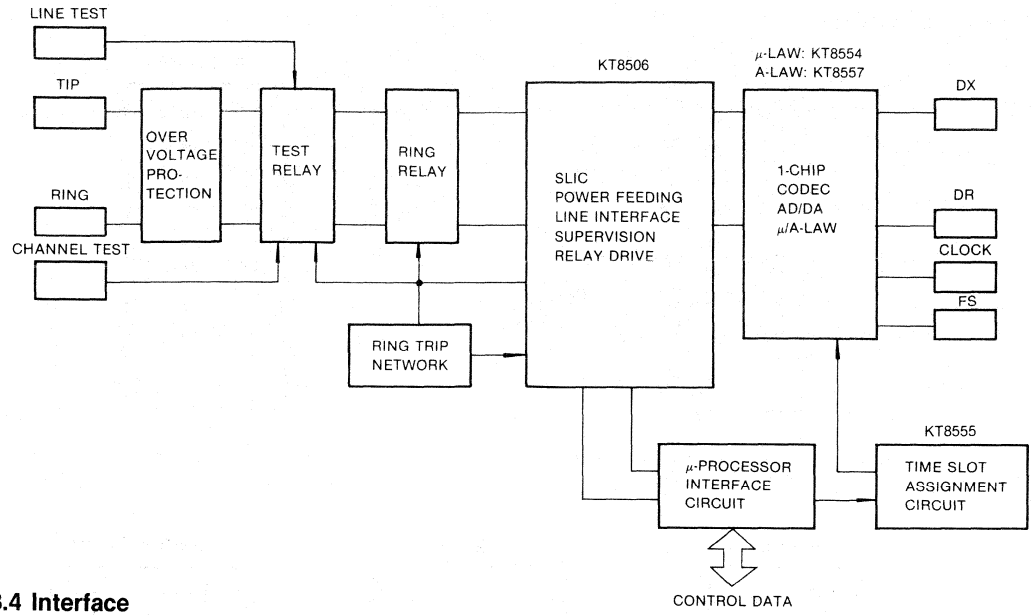

3.4 Interface

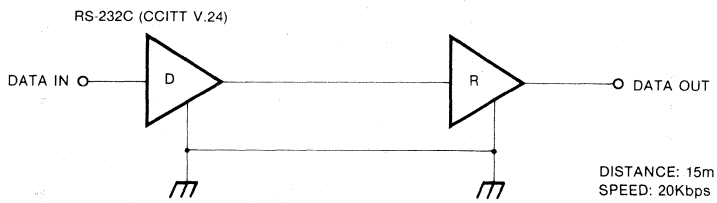

Drivers	Receivers	Transceivers
Quad	Quad	Single
KS5788	KS5789A	KA2654

3.5 Driver

Typical Applications

KA2588A

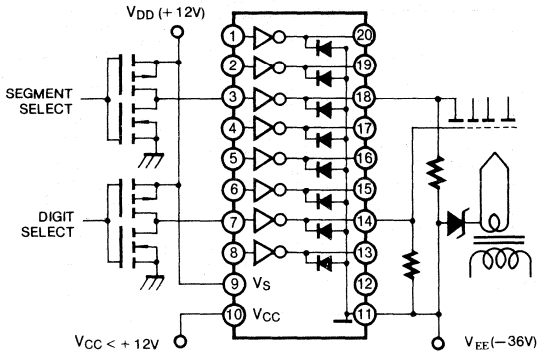

VACUUM FLUORESCENT DISPLAY DRIVER (SPLIT SUPPLY)

KA2588A

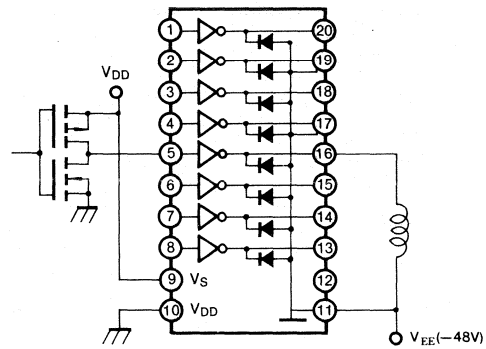

TELECOMMUNICATION RELAY DRIVER (POSITIVE LOGIC)

KA2580A

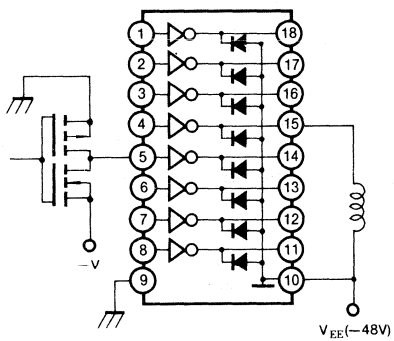

TELECOMMUNICATION RELAY DRIVER (NEGATIVE LOGIC)

K2651

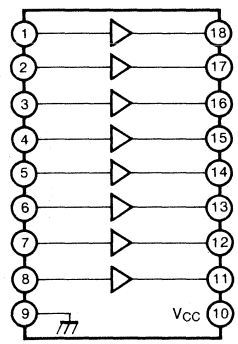

KA2655/6/7/8/9

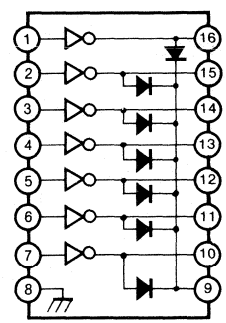

†KT8518

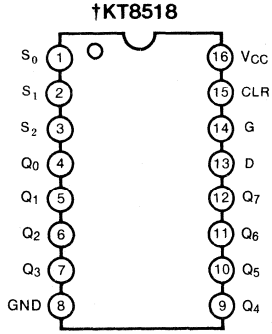

Select Inputs			Latch Addressed
S2	S1	S0	
L	L	L	0
L	L	H	1
L	H	L	2
L	H	H	3
H	L	L	4
H	L	H	5
H	H	L	6
H	H	H	7

4. WATCH IC APPLICATION

4.1 KS5243

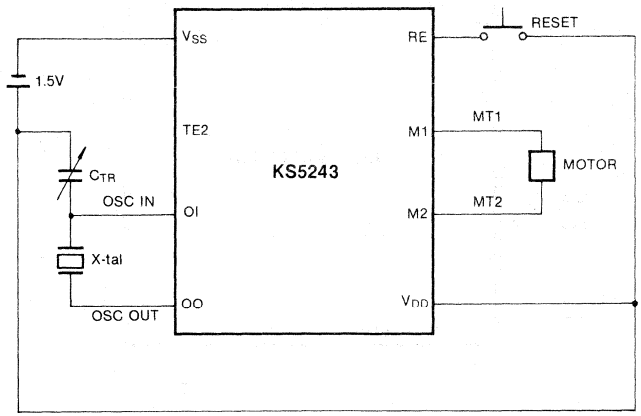

4.2 KS5120/KS5199A

A. External Capacitor Type

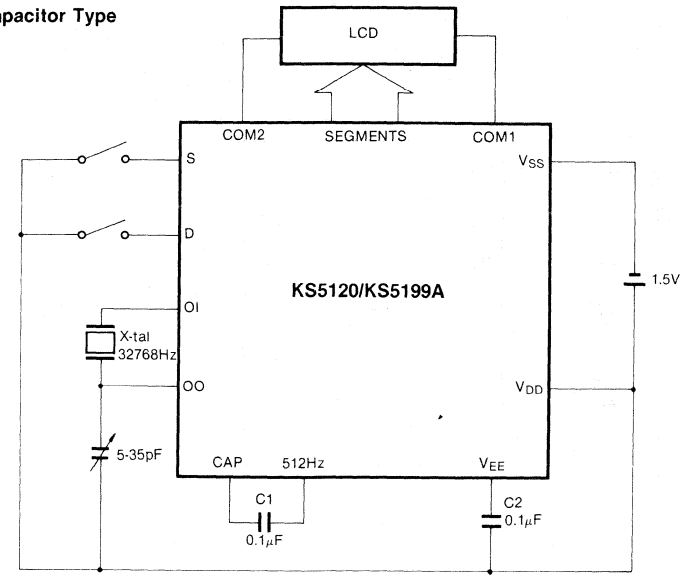

B. Internal Capacitor Type

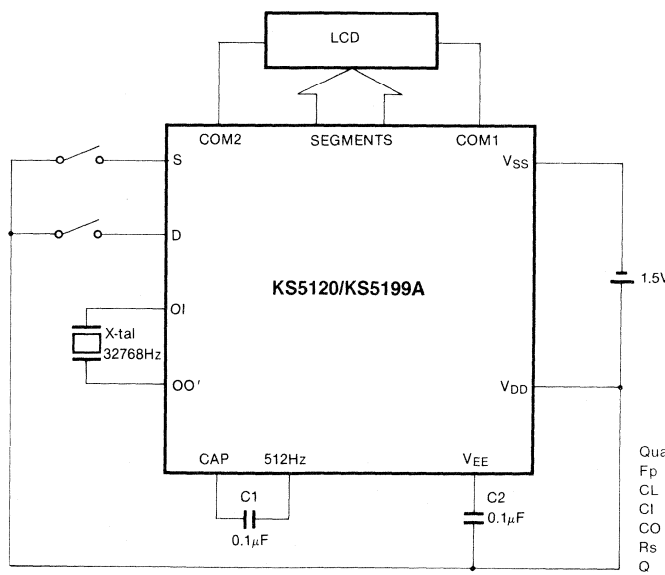

Quartz Crystal Parameter
Fp = 32.768Hz
CL = 12.5pF
CI = 4pF
CO = 2.5pF
Rs = 35KΩ
Q = 35.000

4.3 KS5121

A. External Trimmer Capacitor Type

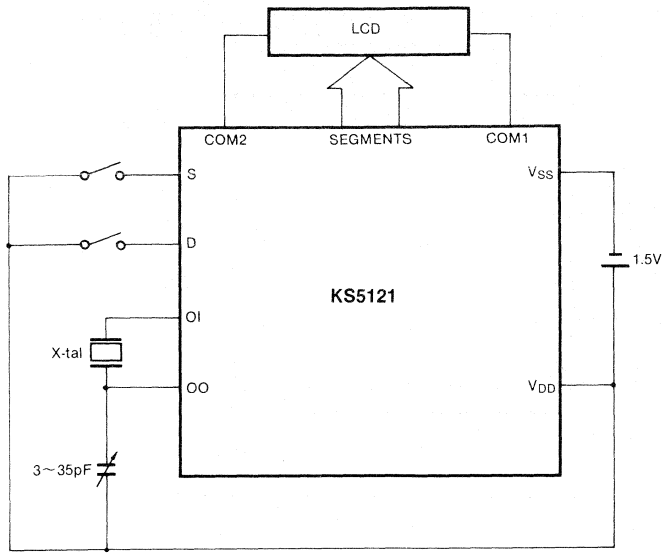

B. Internal Trimmer Capacitor Type

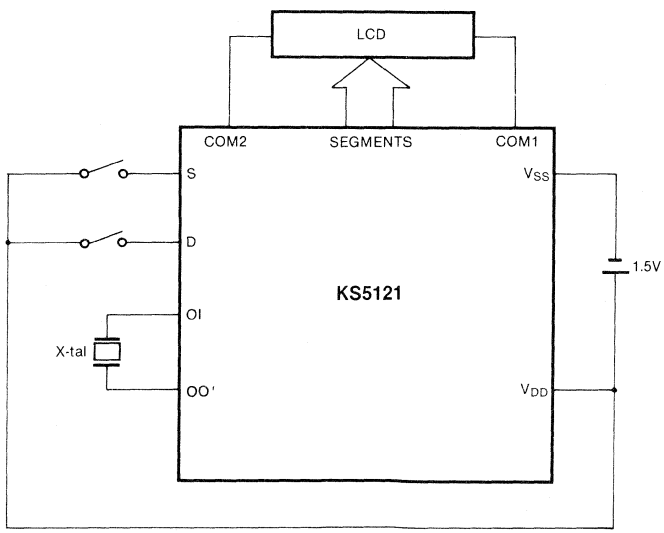

4.4 KS5195

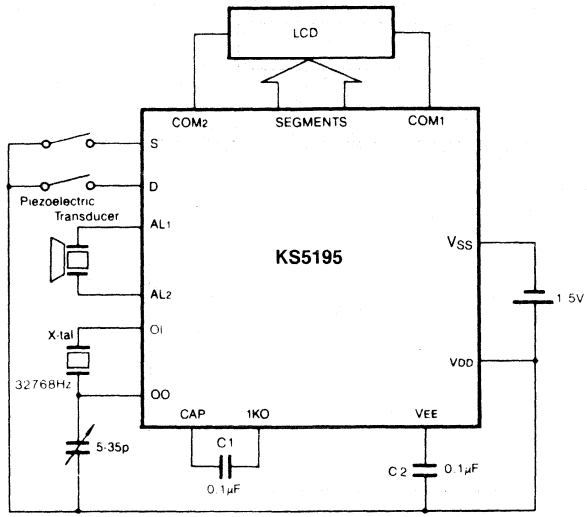
LCD
COM2
SEGMENTS
COM1
S
D
Piezoelectric
Transducer
AL1
KS5195
VSS
AL2
1.5V
X-tal
OI
VDD
32768Hz
OO
CAP
1KO
VEE
5-35p
C1
0.1μF
C2
0.1μF

4.5 KS5191

A. External Capacitor Type

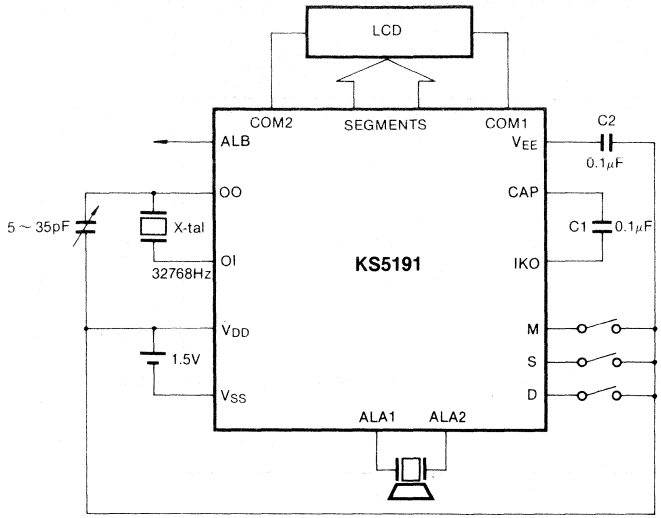

B. Internal Capacitor Type

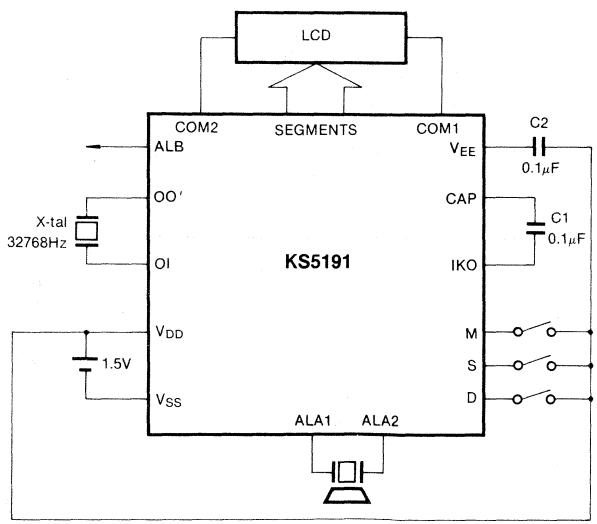

4.6 KS5112

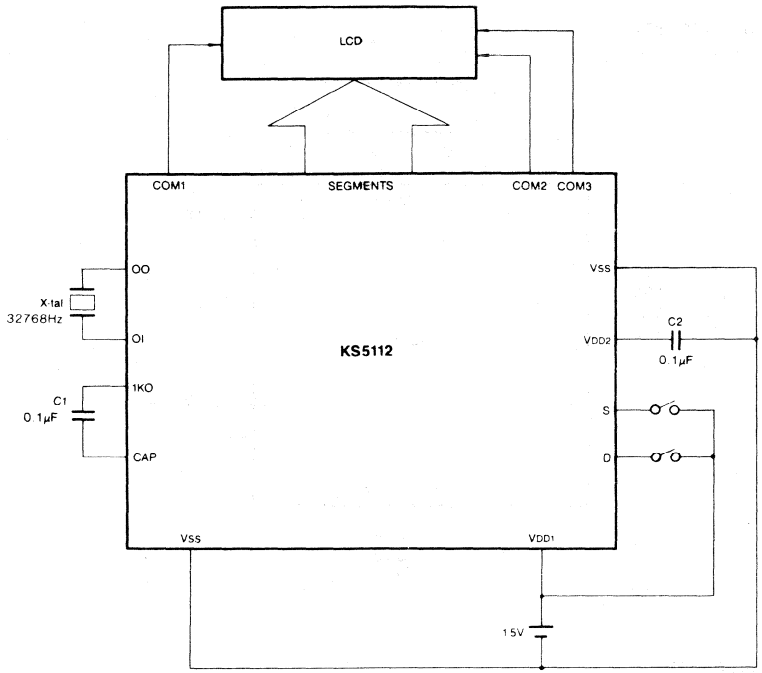

4.7 KS5113

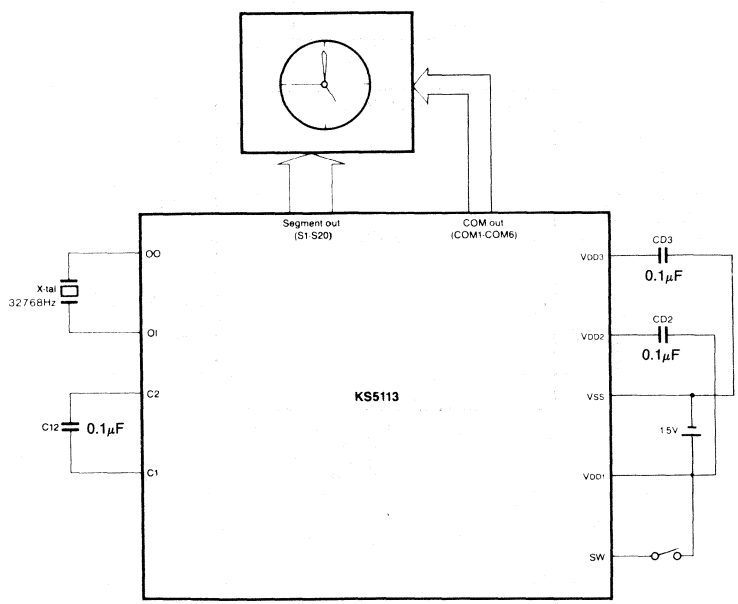

5. ANALOG CLOCK APPLICATION

5.1 KS5223

A. 8 DIP Type

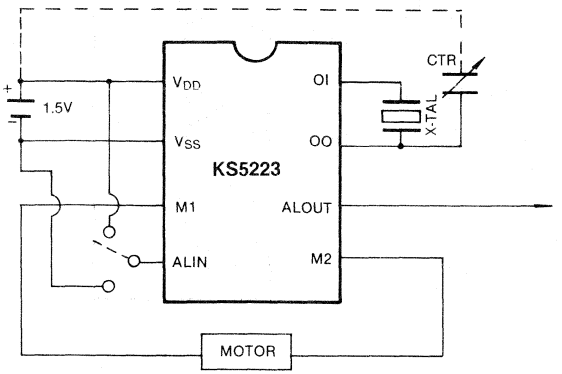

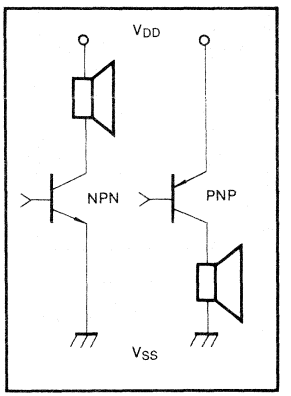

- CTR: 5 ~ 35pF FOR KS5223-XX2
- KS5223-XX4 DOES NOT USE CTR

B. Bare Chip Type

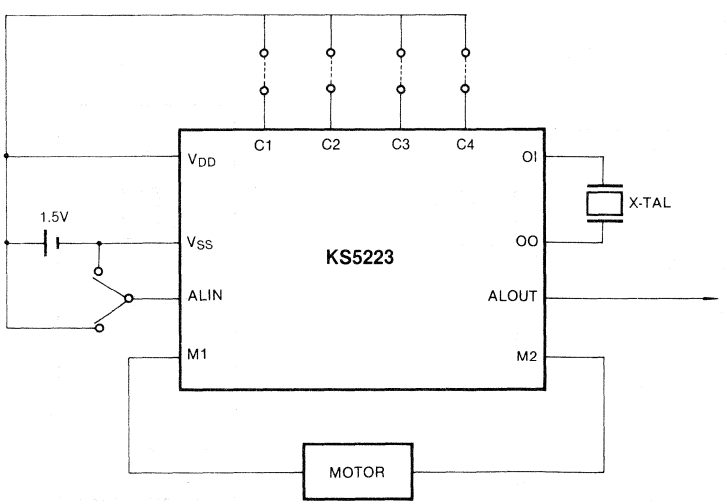

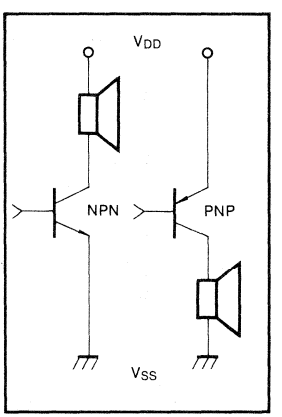

3

5.2 KS5224

A. 8 DIP Type

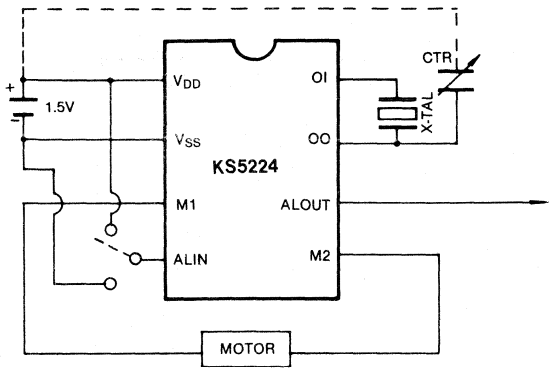

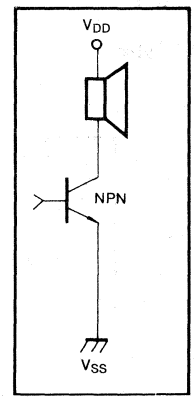

- CTR: 5 ~ 35pF FOR KS5224-XX2
- KS5224-XX4 DOES NOT USE CTR

B. Bare Chip Type

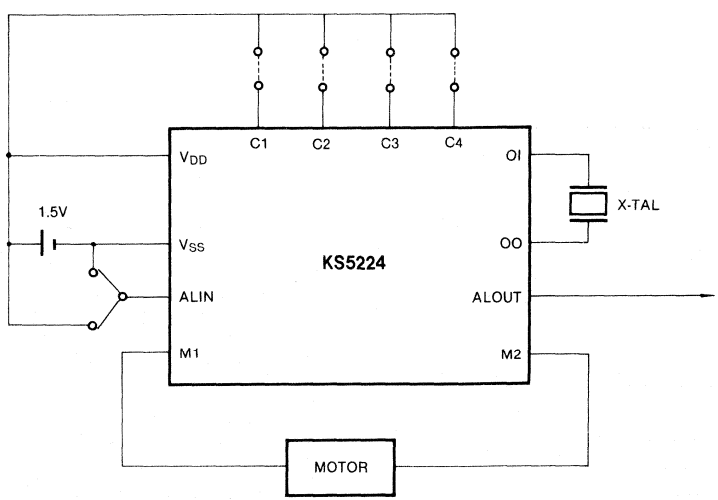

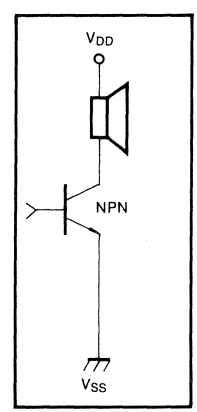

5.3 KS5213

A. Snooze Function Type A (MASK OPTION)

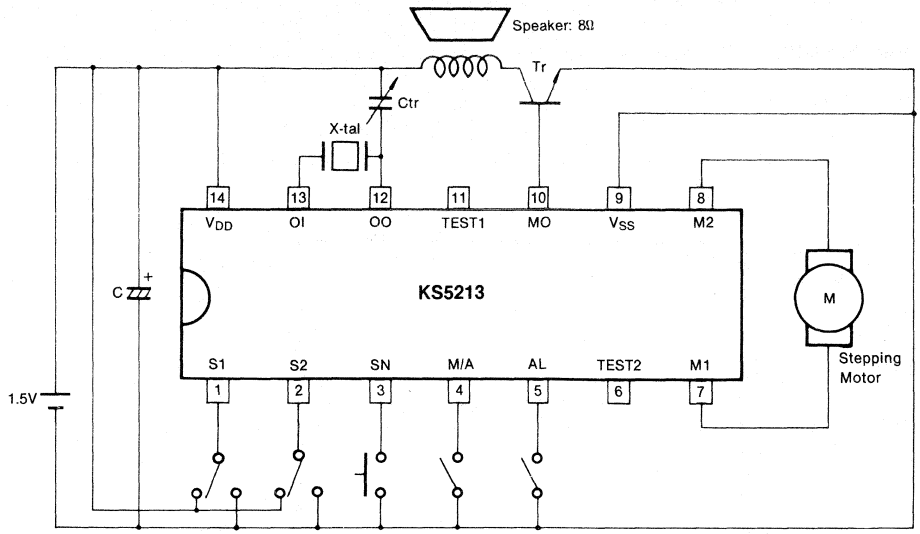

B. Snooze Function Type B (MASK OPTION)

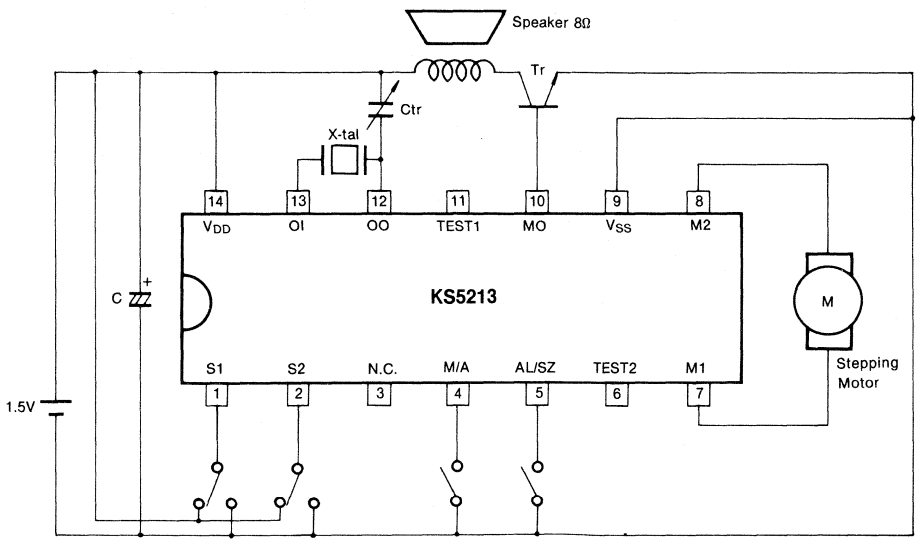

* NC: Not Connected

$C_{tr} = 5 \sim 35pF$
$C = 50\mu F$
T_r = NPN Transistor
KSD227Y, KSC2001Y
X-tal Parameter
$F_P = 32{,}768Hz$

$C_L = 10pF$
$C_i = 4pF$
$C_O = 25pF$
$R_S = 36K\Omega$
$Q = 35{,}000$

6. MELODY IC APPLICATION

6.1 KS5310 Series

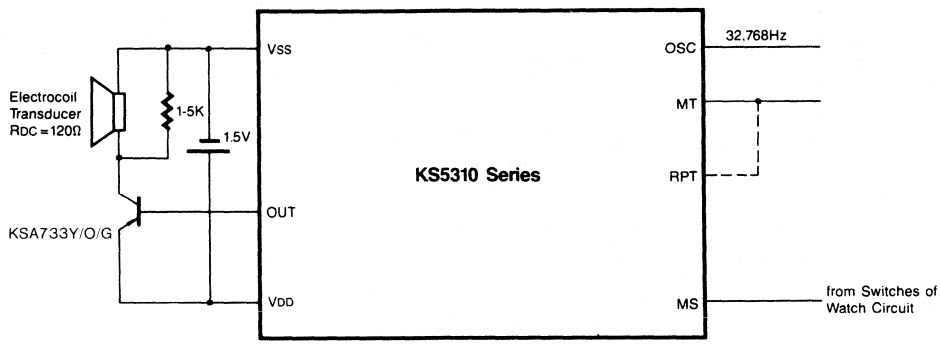

*Currently available type
KS5310A: Oh! Susanna

6.2 KS5381

A. Repeat Mode

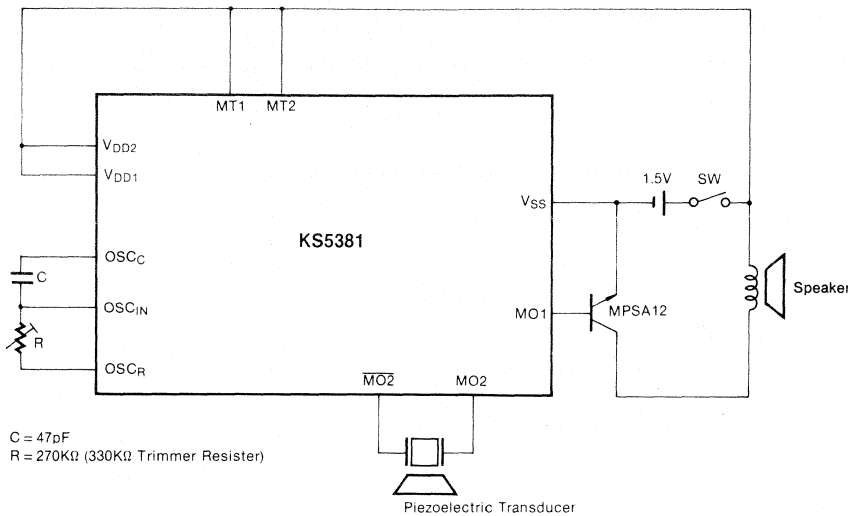

C = 47pF
R = 270KΩ (330KΩ Trimmer Resister)

B Switch Select Mode

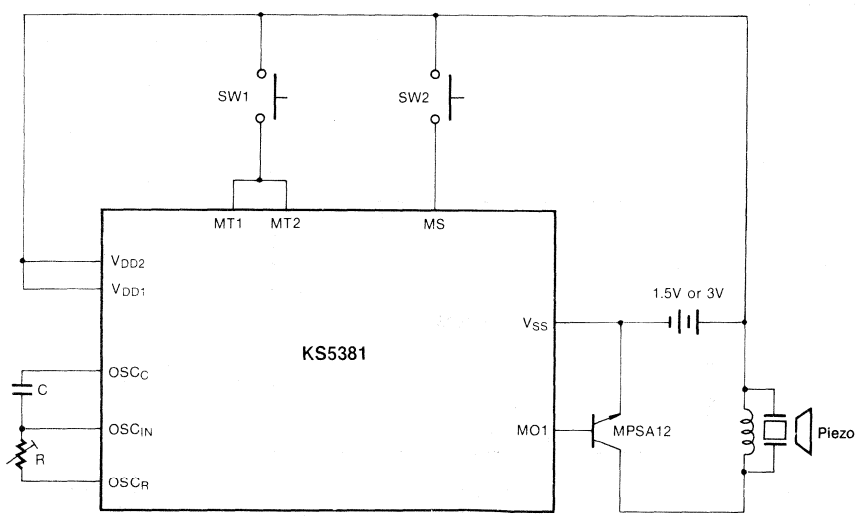

C = 47pF
R = 270KΩ (470KΩ Trimmer Resister)

C. Application Select Mode

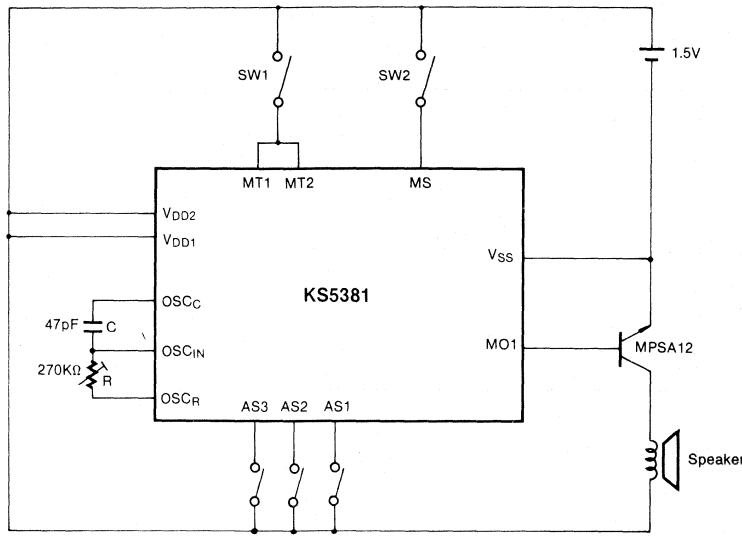

* Application Option for Melody Select (AS3 = L, AS2 = L, AS1 = H)

D. Trigger Mode

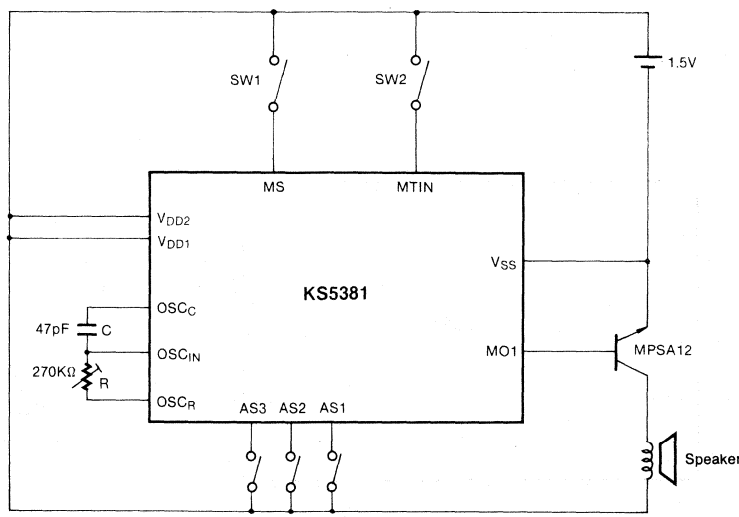

* All melodies can be available by the combination of AS3, AS2, and AS1.

E. For Melody Card

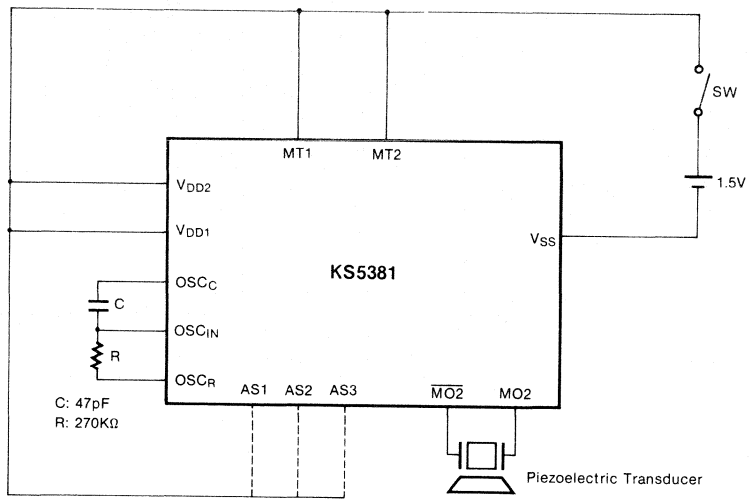

* Application Option for Melody Select (AS3, AS2, AS1)

3

F. Combination with Watch

1) 1.5V (AgO BATTERY)

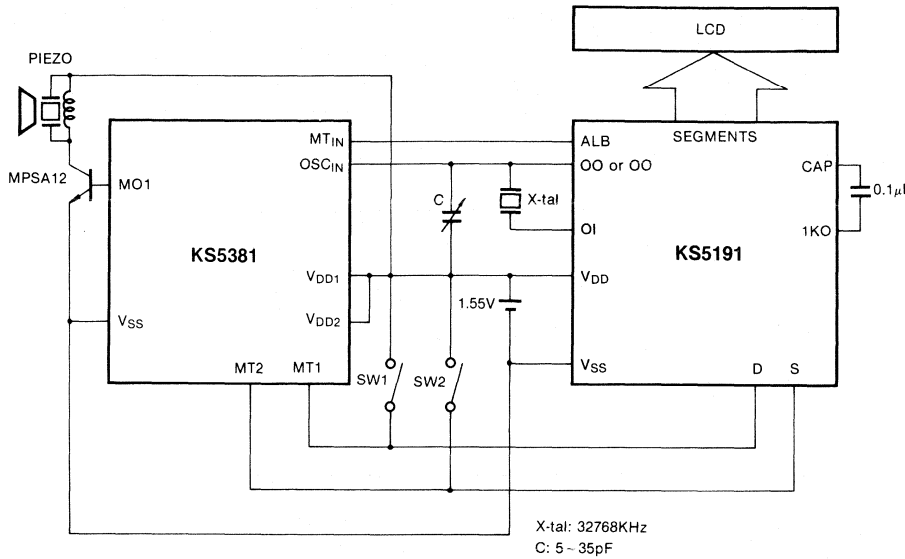

2) 3.0V (LITHIUM BATTERY)

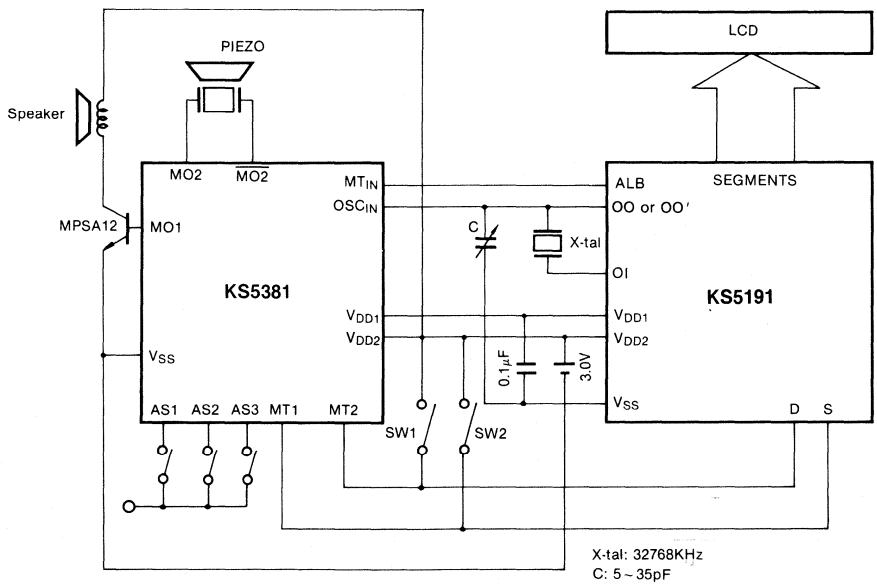

6.3 KS5319

A. Standard Circuit

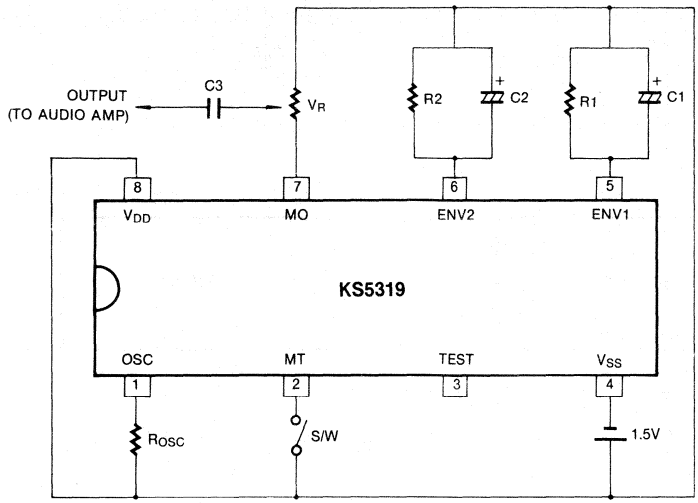

B. TR Drive Circuit

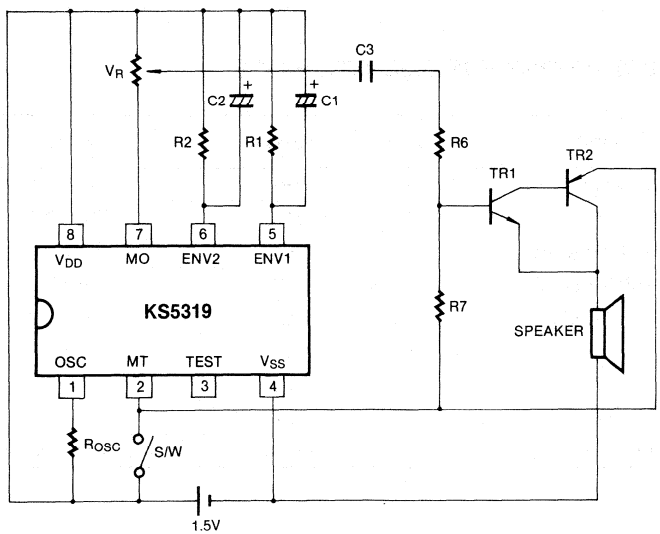

C. Audio AMP Drive Circuit

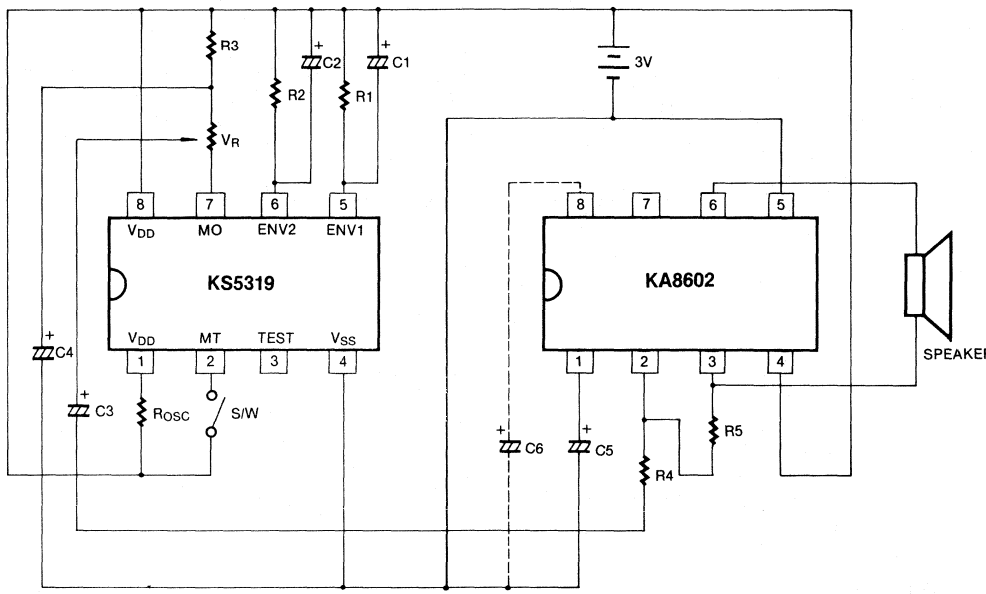

RECOMMENDED CONDITIONS FOR DISCRETE PARTS

Symbol	Limits	Unit	Symbol	Limits	Unit
SP	8Ω Dynamic Speaker	—	R7	0.68 ~ 2.2	MΩ
VR	50	KΩ	R_{OSC}	560 ~ 750	KΩ
TR1	NPN TR (C945)	—	C1	4.7	μF
TR2	PNP TR (A733)	—	C2	4.7	μF
R1, R2	100 ~ 120	KΩ	C3	0.1	μF
R3	2 ~ 3	KΩ	C4	4.7	μF
R4	75	KΩ	C5	1	μF
R5	2.7 ~ 3	KΩ	C6	4.7 or nothing	μF
R6	100 or nothing	KΩ	KA8602	Low power audio amp	—

6.4 KS5318

A. Combination with Clocks

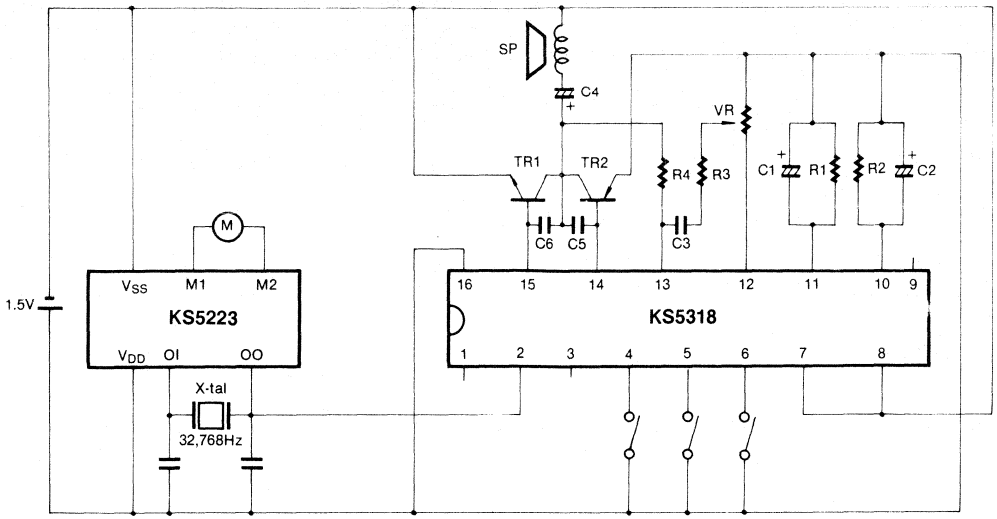

B. Examples of Application: Music Boxes, Door Bell etc.

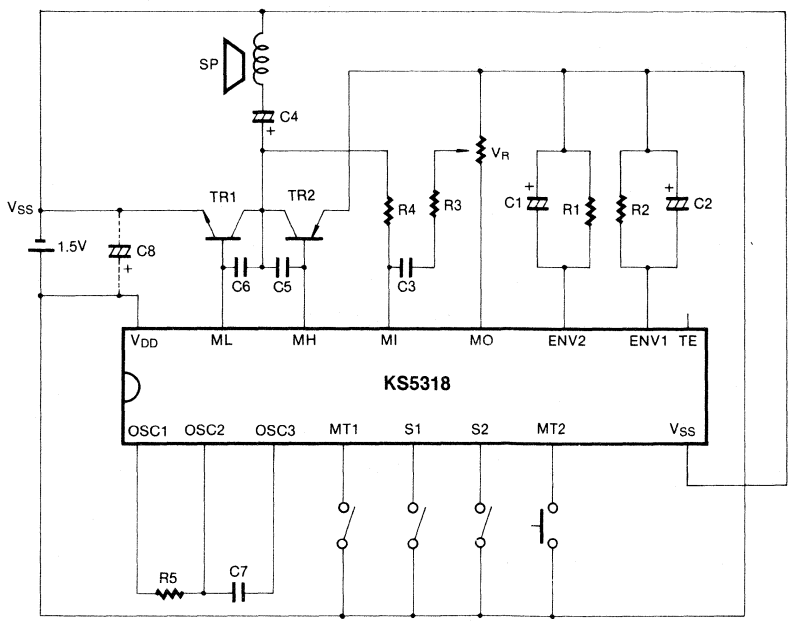

RECOMMENDED CONDITIONS FOR DISCRETE PARTS

Symbol	Limits	Unit	Symbol	Limits	Unit
TR1	NPN DC $h_{FE} = 160$		C1, C2	4.7	μF
TR2	PNP DC $h_{FE} = 160$		C3	0.1	μF
SP	8Ω dynamic speaker		C4	100 ~ 300	μF
VR	50	KΩ	C5	0.01 ~ 0.047	μF
R1, R2	100 ~ 120	KΩ	C6	0.01 or nothing	μF
R3	120 ~ 270	KΩ	C7	47	μF
R4	470	KΩ			
R5	270	KΩ	C8	50 or nothing	μF

6.5 KS5321

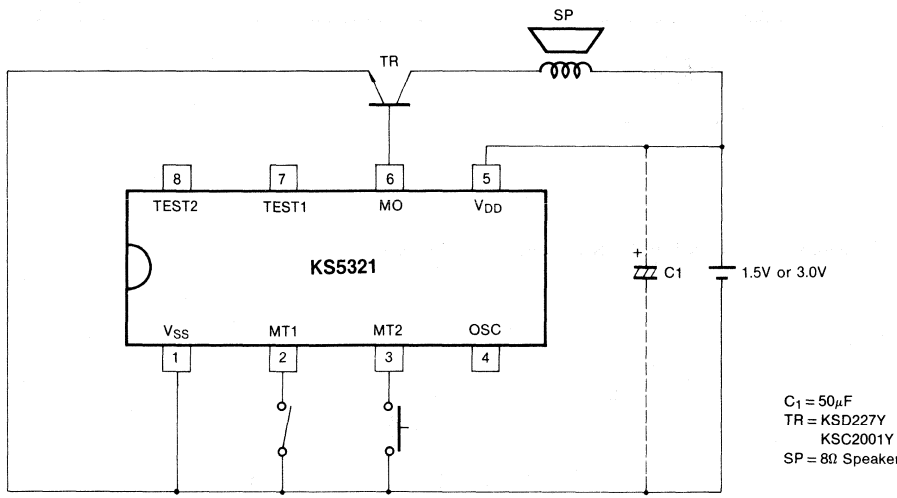

6.6 KS531

A. One Shot Mode

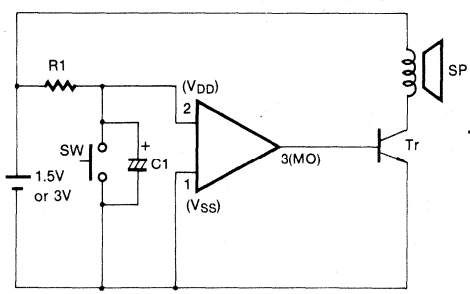

B. Level Hold Mode

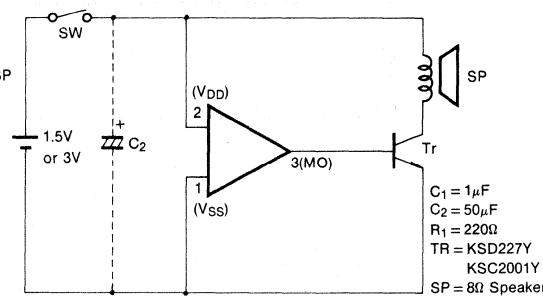

6.7 KS537

1) For Speaker Type

i) One Shot Mode

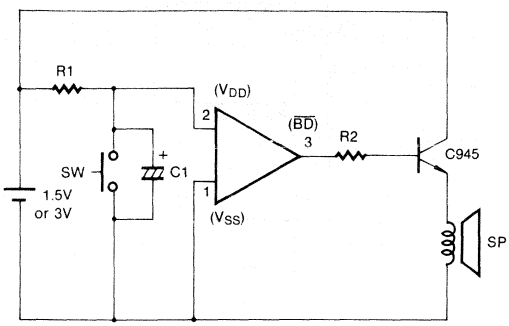

R1: 220Ω
R2: 2.7 ~ 4.7KΩ
C1: 1μF
SP: 8Ω Speaker

ii) Level Hold Mode

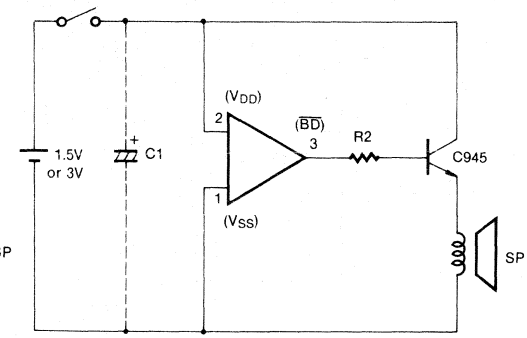

R2: 2.7 ~ 4.7KΩ
C1: 1μF
SP: 8Ω Speaker

2) For Piezo Type

i) One Shot Mode

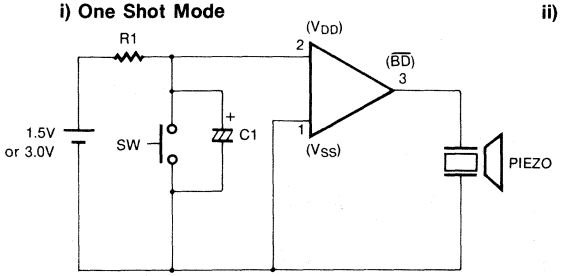

R1: 220Ω
C1: 1μF

ii) Level Hold Mode

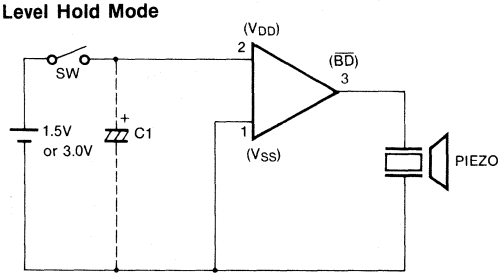

C1: 1μF

3

6.8 KS5327

1) For Speaker

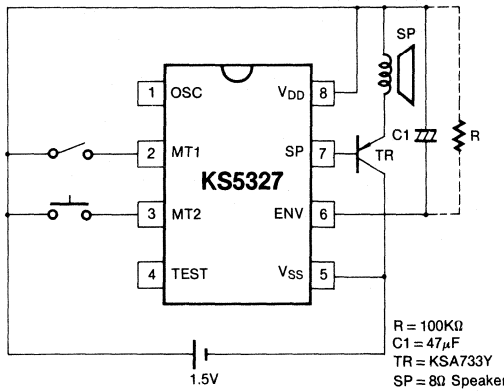

2) For Piezo

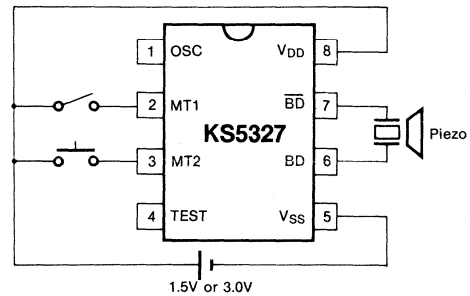

R, C is necessary only when employing ENVELOPE circuit
Otherwise, ENVELOPE terminal must be connected to V_{SS}.

6.9 KS5328

1. 1.5V Battery Operation

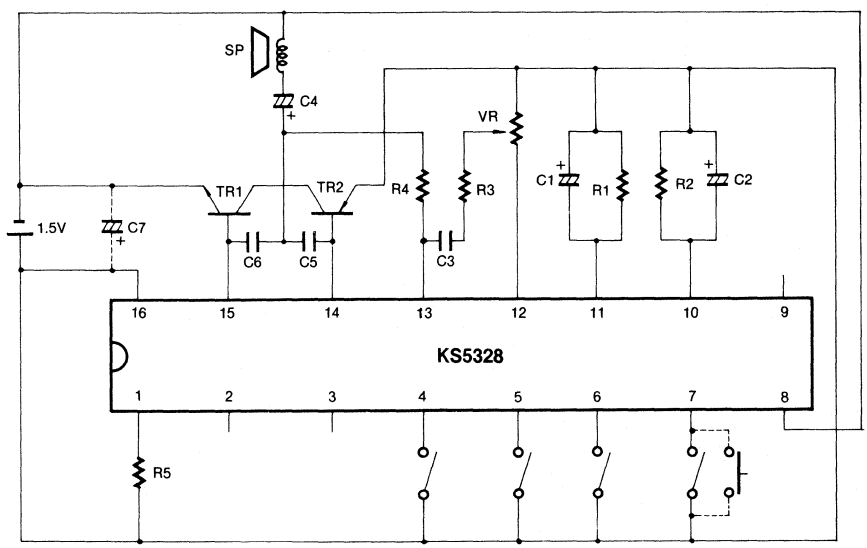

2. 3.0V Battery Operation

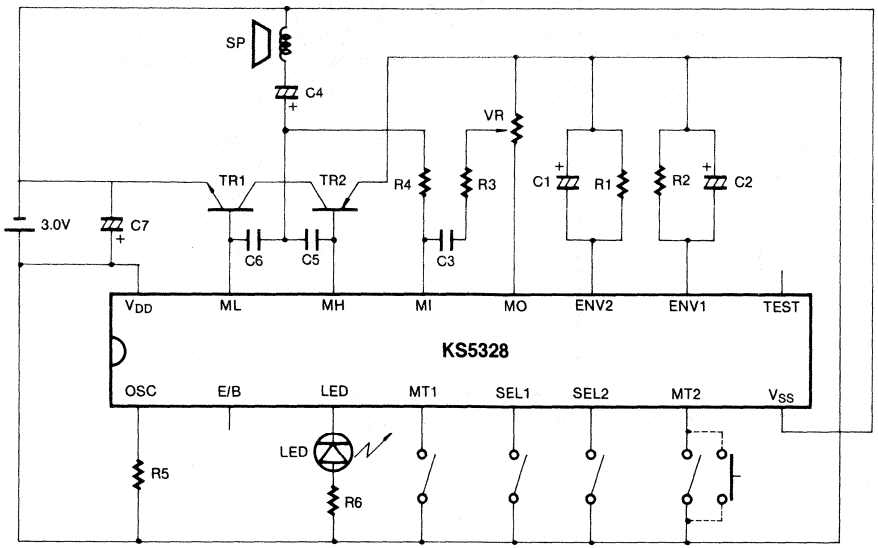

RECOMMENDED CONDITIONS FOR DISCRETE PARTS

Symbol	Limits	Unit	Symbol	Limits	Unit
TR1	NPN DC $h_{FE}=160$ (KSD227Y)		R6	0~470	Ω
TR2	PNP DC $h_{FE}=160$ (KSA 642Y)		C1	4.7	μF
SP	8Ω dynamic speaker		C2	4.7	μF
VR	50	KΩ	C3	0.1	μF
R1, R2	100	KΩ	C4	100~300	μF
R3	270	KΩ	C5	0.01~0.047	μF
R4	470	KΩ	C6	0.01 or nothing	μF
R5	560~750KΩ	KΩ	C7	50	μF

3

6.10 KS5814

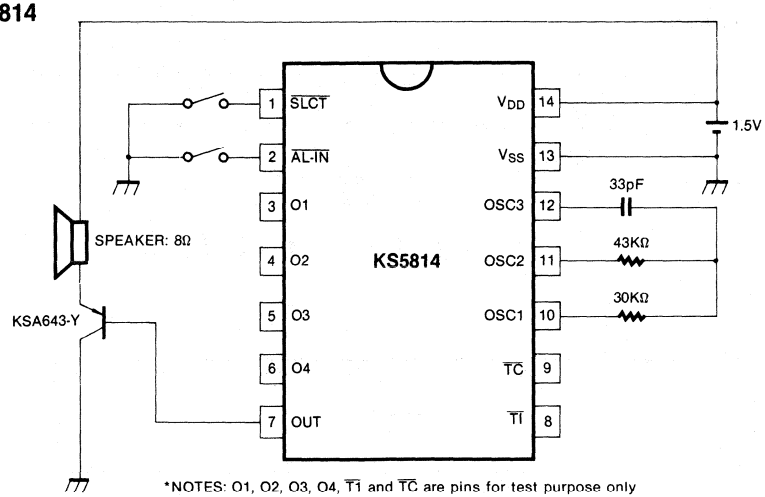

*NOTES: O1, O2, O3, O4, $\overline{T1}$ and $\overline{TC}$ are pins for test purpose only

6.11 KS5401

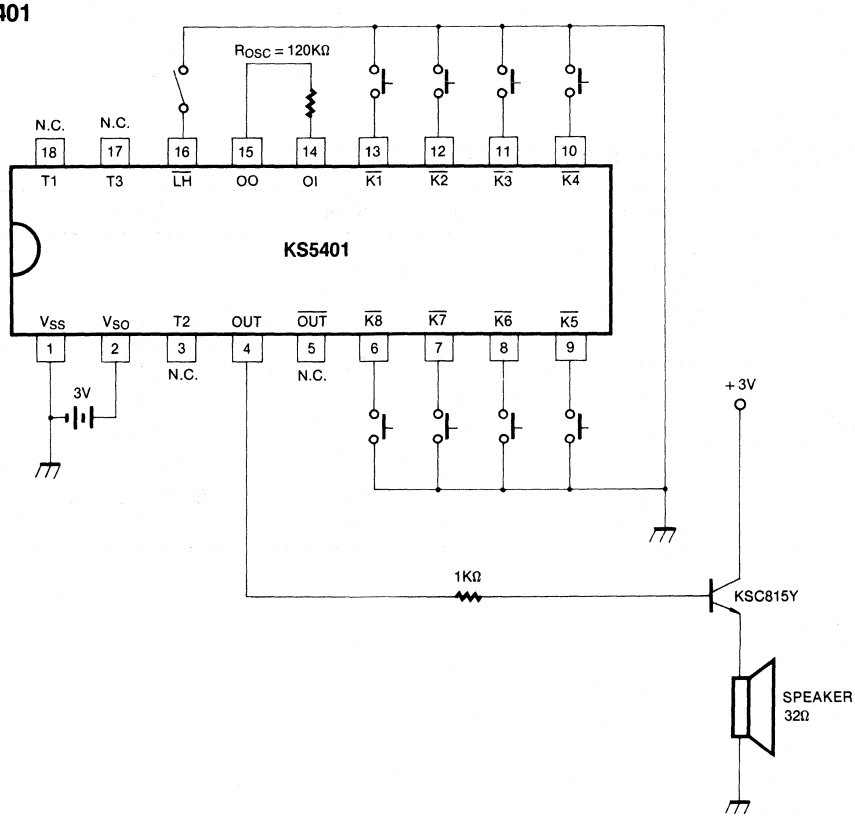

7. VOICE SYNTHESIZER IC APPLICATION

7.1 KS5919

• IMCM Mode

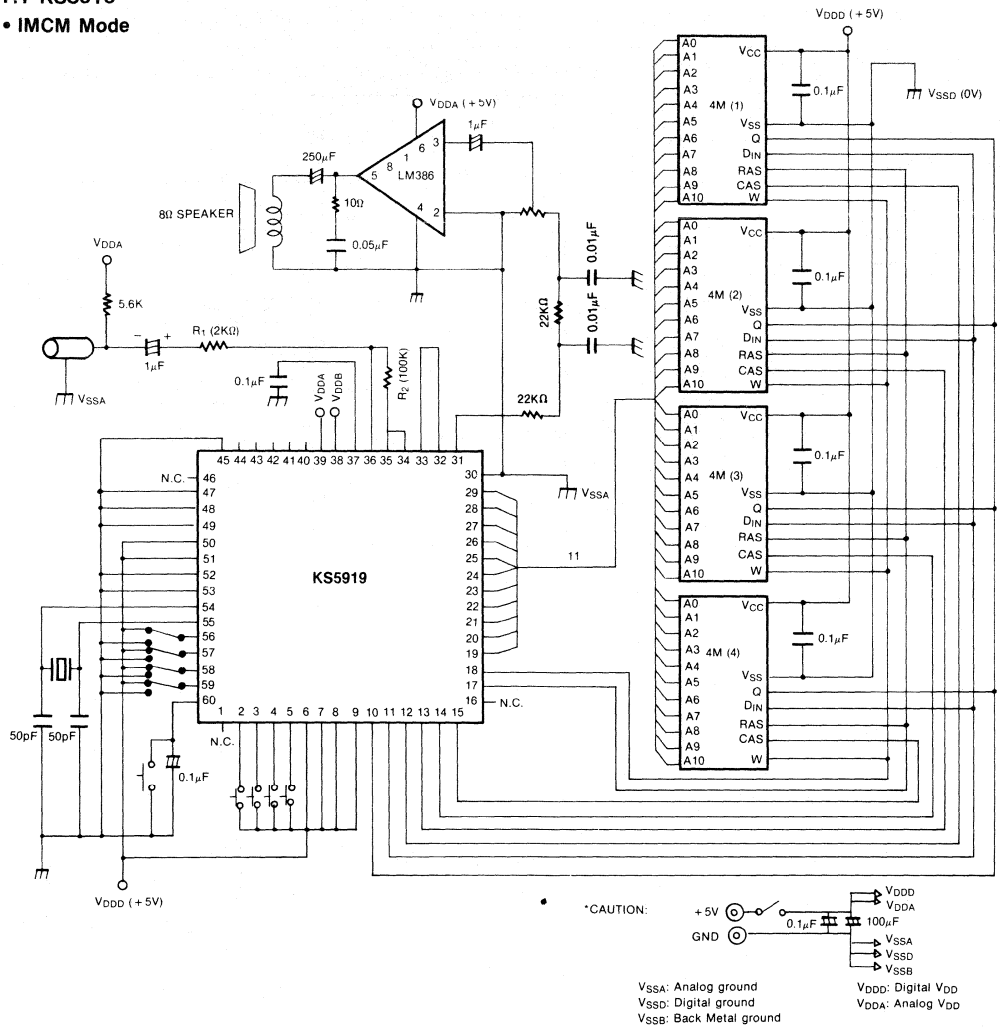

3

7.2 KS5914

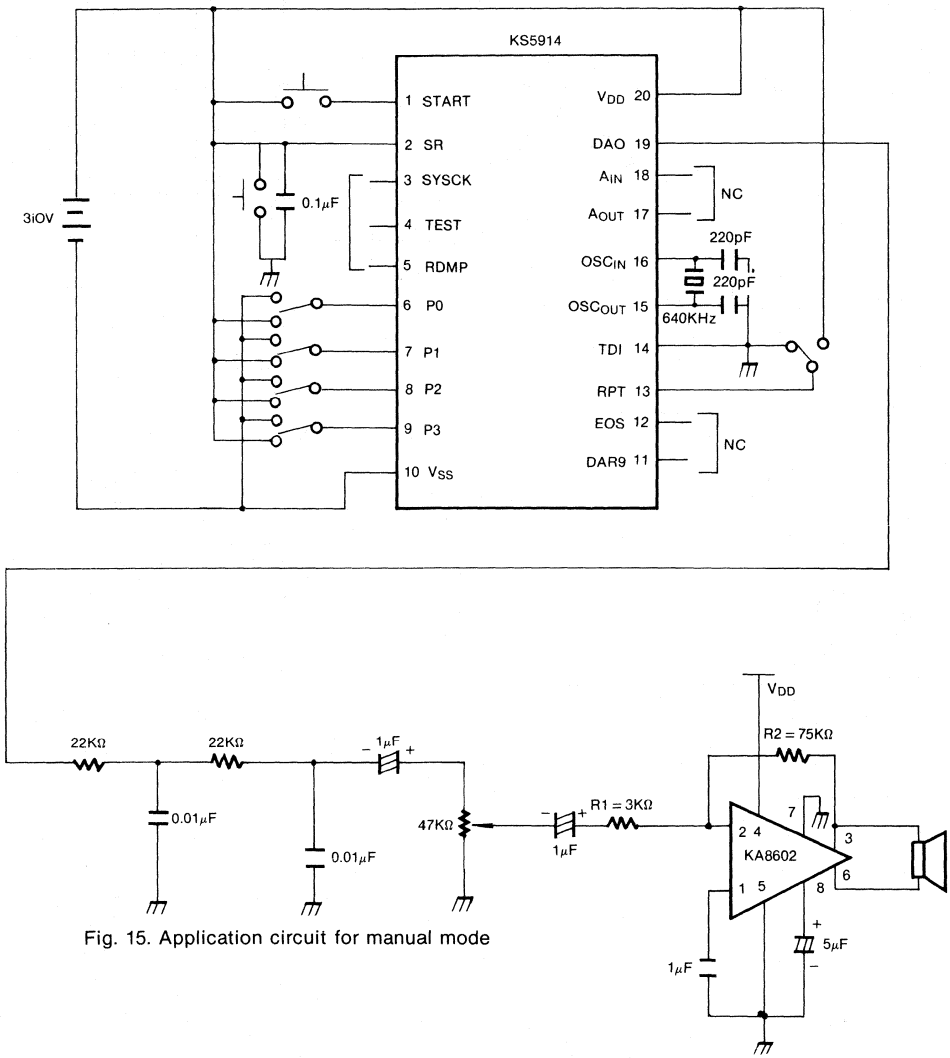

Fig. 15. Application circuit for manual mode

Remarks:

1) N.C = No connection.
2) Chip goes to repeat mode when RPT is "HIGH"
3) When you use resistor to oscillation circuit, adjust the resistor value to make SYSCK pin is 64KHz in order to get the 640KHz oscillation frequency exactly.
4) The gain of the KA8602 is $-R2/R1$, users can change this gain.

7.3 KS5912

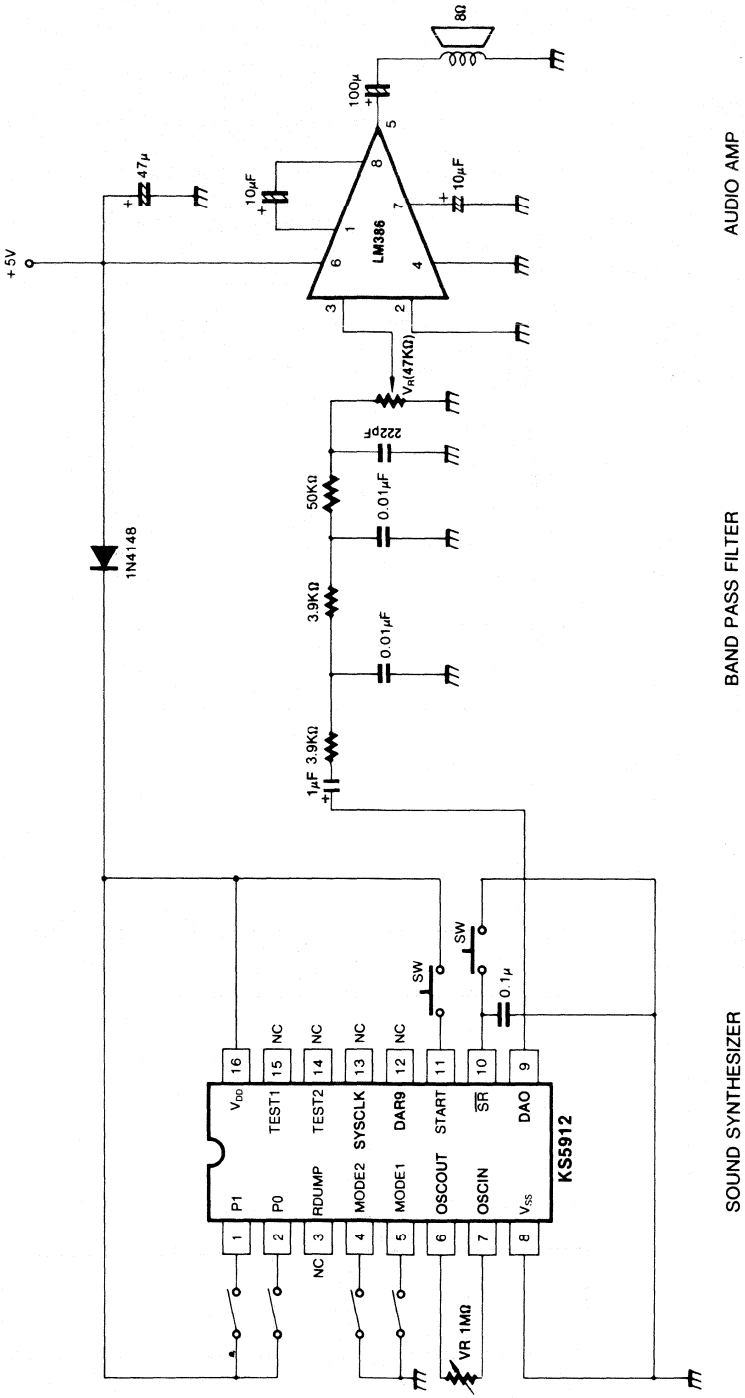
8Ω
100μ
5
8
1
6
4
7
3
2
LM386
10μF
10μF
47μ
+5V
VR(47KΩ)
222pF
50KΩ
0.01μF
1N4148
3.9KΩ
0.01μF
1μF
3.9KΩ
SW
SW
0.1μ
16
15
14
13
12
11
10
9
VDD
TEST1
TEST2
SYSCLK
DAR9
START
SR
DAO
KS5912
P1
P0
RDUMP
MODE2
MODE1
OSCOUT
OSCIN
VSS
1
2
3
4
5
6
7
8
NC
NC
NC
NC
NC
VR 1MΩ
AUDIO AMP
BAND PASS FILTER
SOUND SYNTHESIZER

7.4 KS5915

A. Incase of Using AMP1

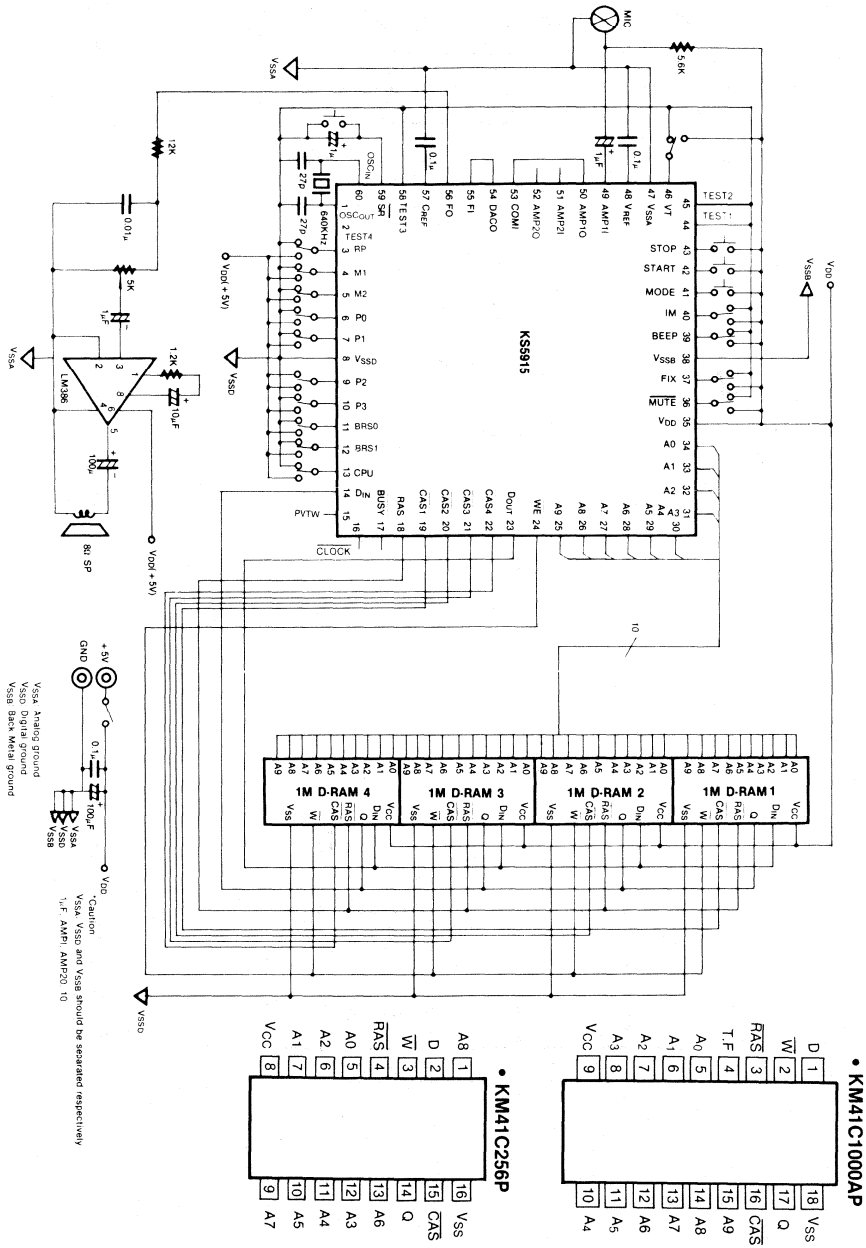

B. Incase of Using AMP1 + AMP2

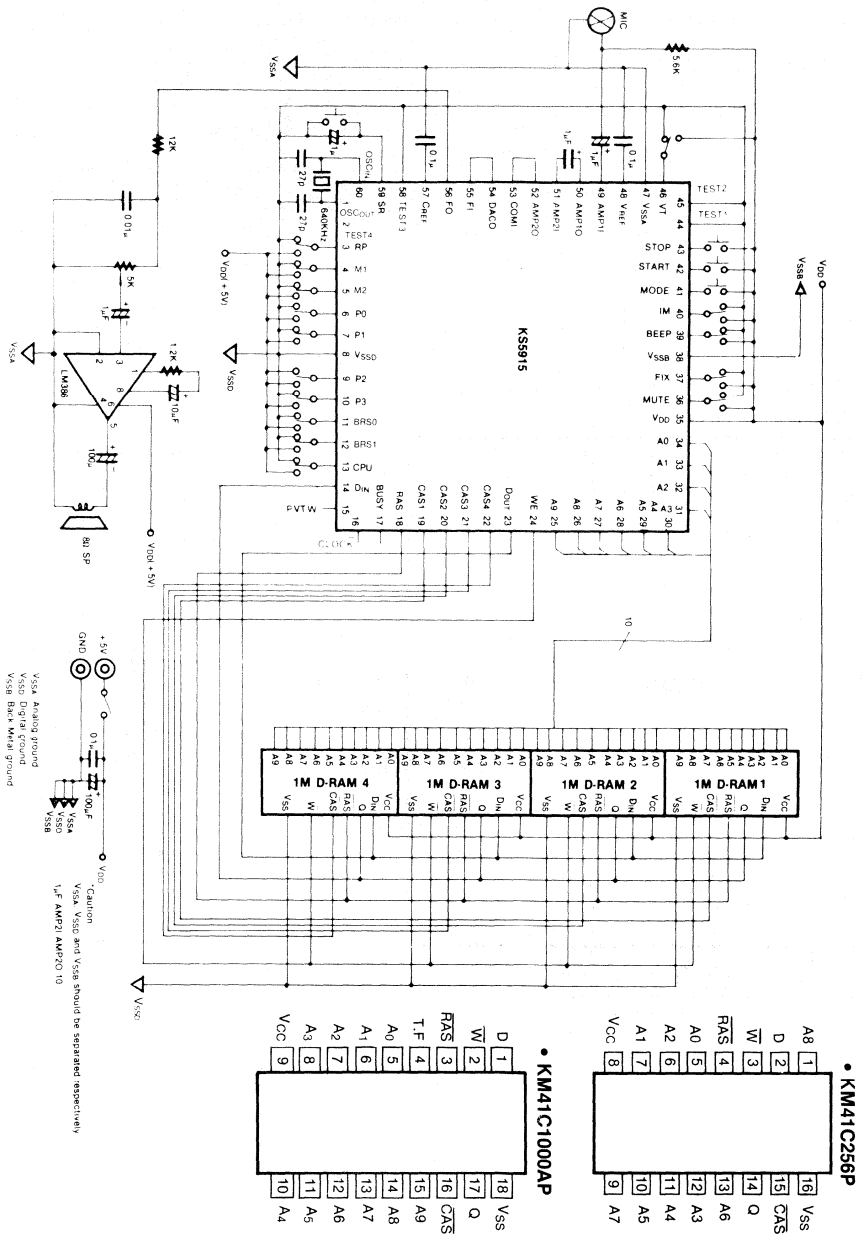

7.5 KS5917

A. Manual Mode

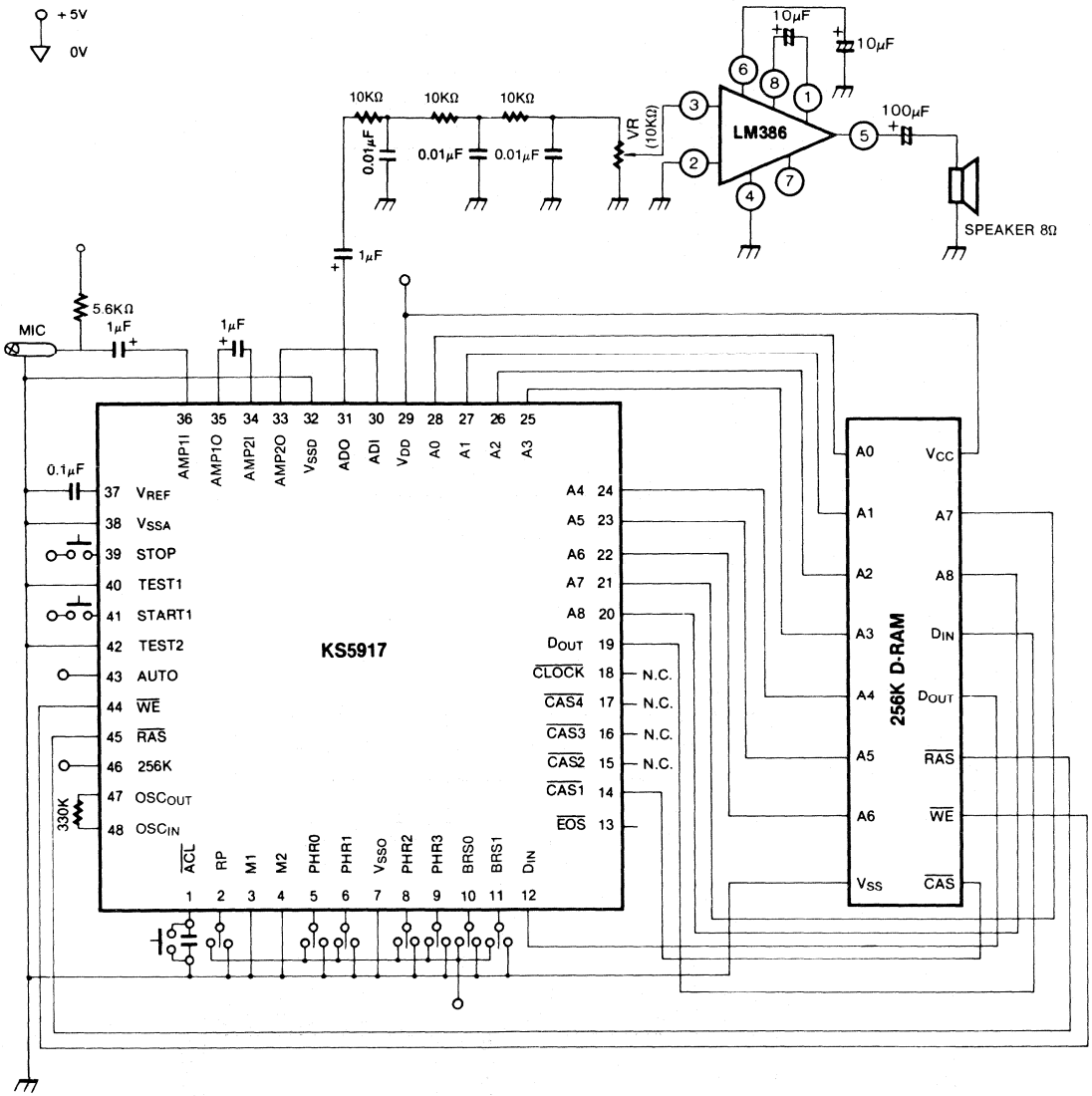

B. Auto Mode

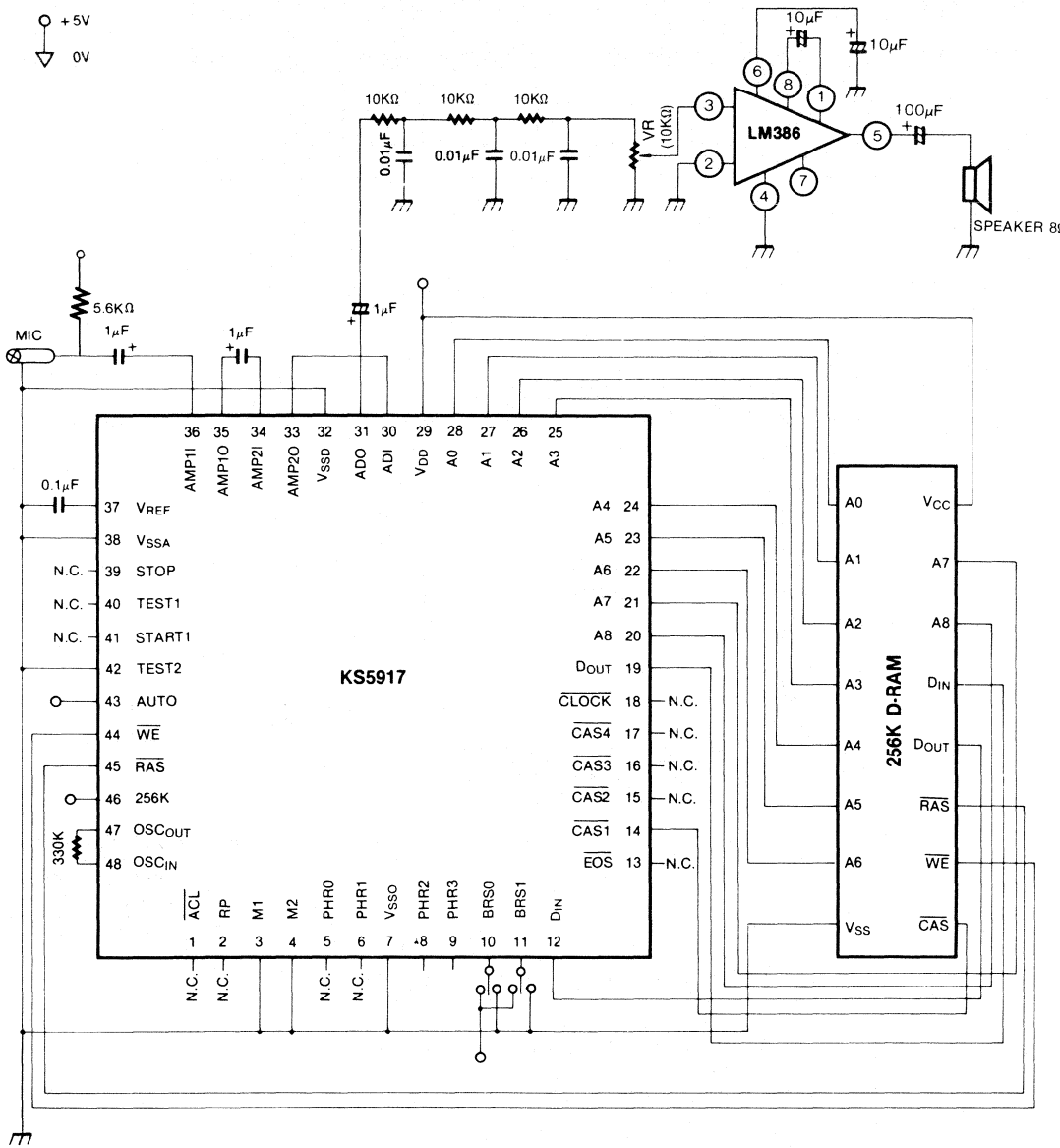
+5V
0V
10KΩ
10KΩ
10KΩ
0.01μF
0.01μF
0.01μF
VR (10KΩ)
10μF
10μF
LM386
100μF
SPEAKER 8Ω
5.6KΩ
MIC
1μF
1μF
1μF
0.1μF
330K
KS5917
36 AMP1I
35 AMP1O
34 AMP2I
33 AMP2O
32 VSSD
31 ADO
30 ADI
29 VDD
28 A0
27 A1
26 A2
25 A3
37 VREF
38 VSSA
N.C. 39 STOP
N.C. 40 TEST1
N.C. 41 START1
42 TEST2
43 AUTO
44 WE
45 RAS
46 256K
47 OSCOUT
48 OSCIN
A4 24
A5 23
A6 22
A7 21
A8 20
DOUT 19
CLOCK 18 N.C.
CAS4 17 N.C.
CAS3 16 N.C.
CAS2 15 N.C.
CAS1 14
EOS 13 N.C.
1 ACL
2 RP
3 M1
4 M2
5 PHR0
6 PHR1
7 VSSO
8 PHR2
9 PHR3
10 BRS0
11 BRS1
12 DIN
N.C.
N.C.
N.C.
N.C.
256K D-RAM
A0
A1
A2
A3
A4
A5
A6
VSS
VCC
A7
A8
DIN
DOUT
RAS
WE
CAS

8. CALCULATOR APPLICATION

8.1 KS6125: 8 digits basic calculator with ON/AC, ON/CCE, CCE

A. For use with a solar cell

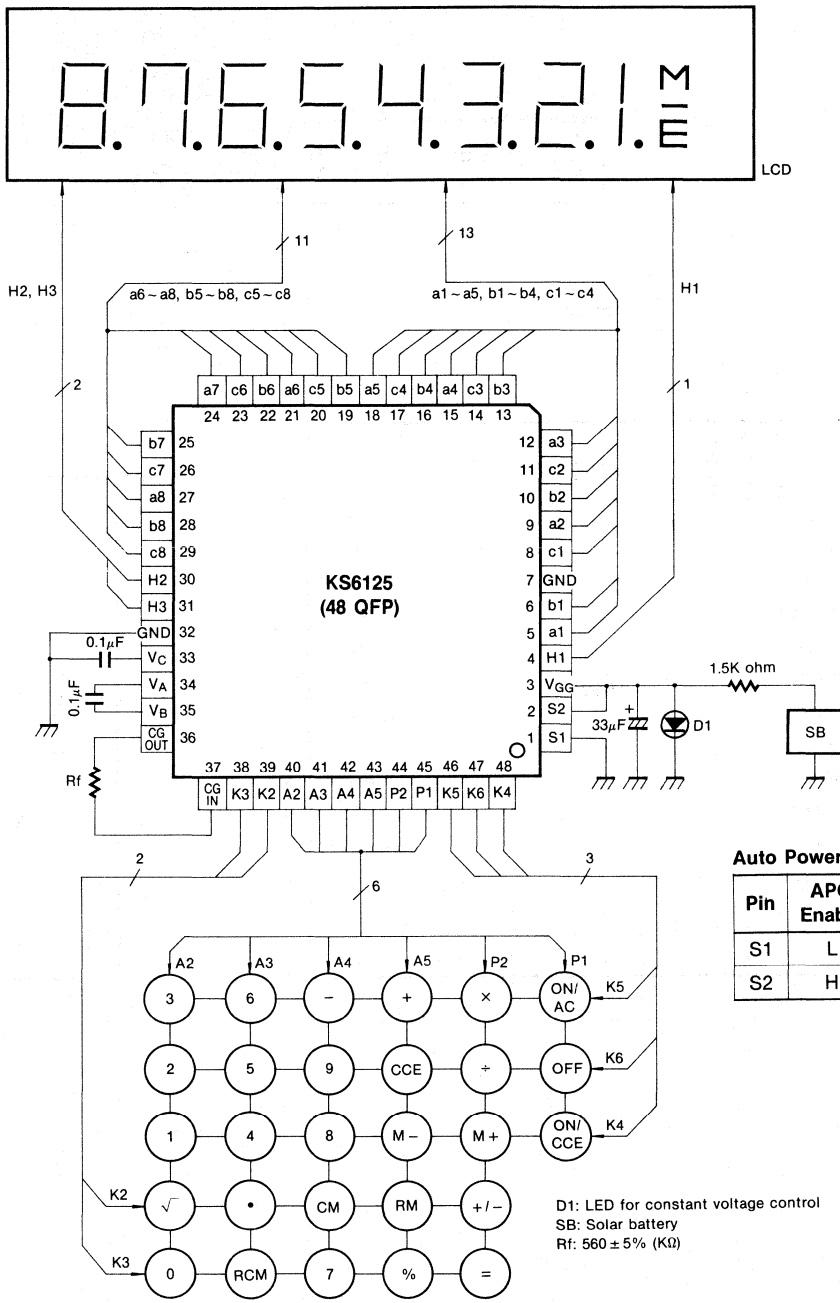

Auto Power Off Condition

Pin	APO Enable	APO Disable
S1	L	H
S2	H	L

D1: LED for constant voltage control
SB: Solar battery
Rf: 560 ± 5% (KΩ)

B. For use with a battery

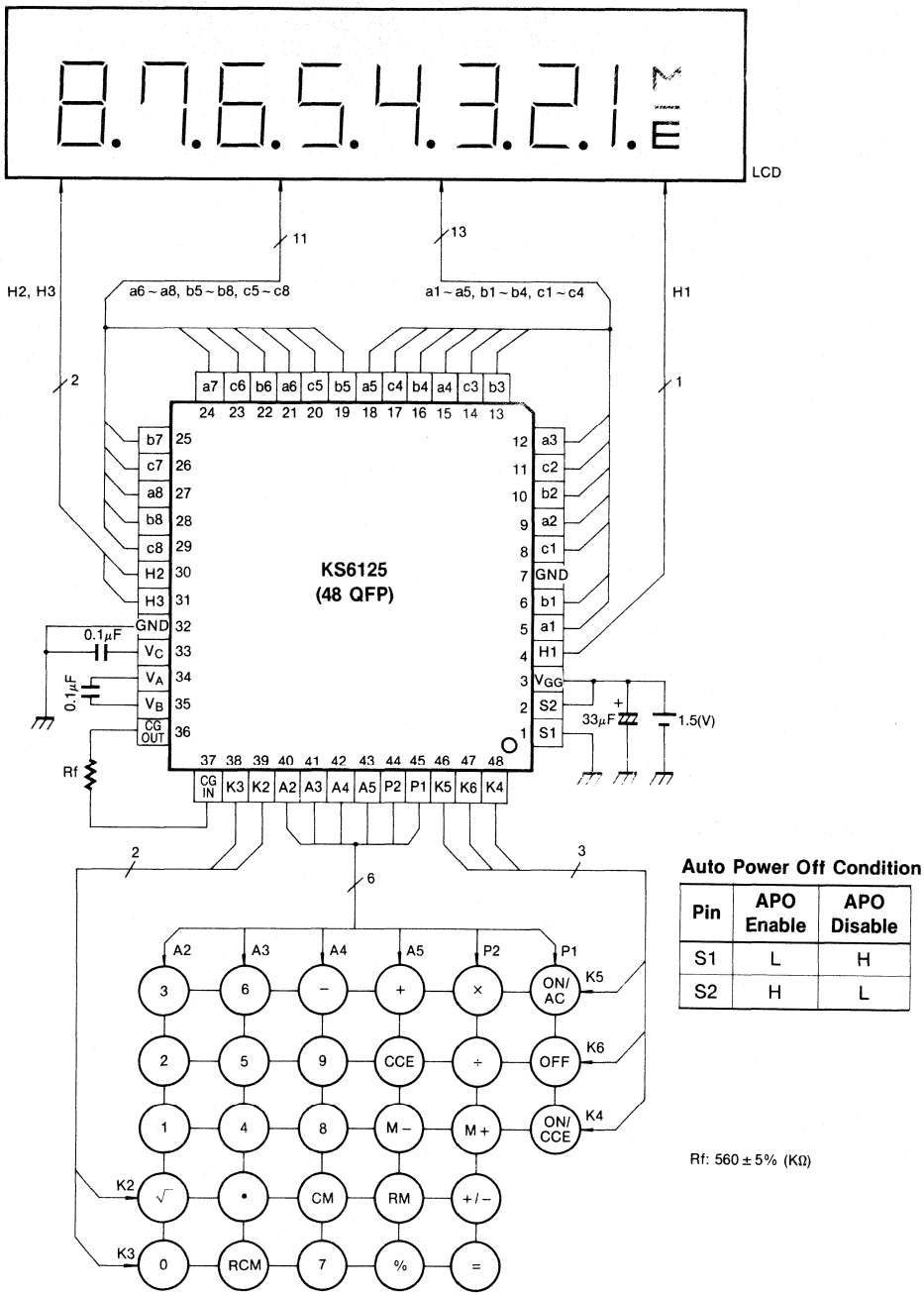

Auto Power Off Condition

Pin	APO Enable	APO Disable
S1	L	H
S2	H	L

Rf: 560 ± 5% (KΩ)

8.2 KS6225: mirror type of KS6325

A. For use with a solar cell

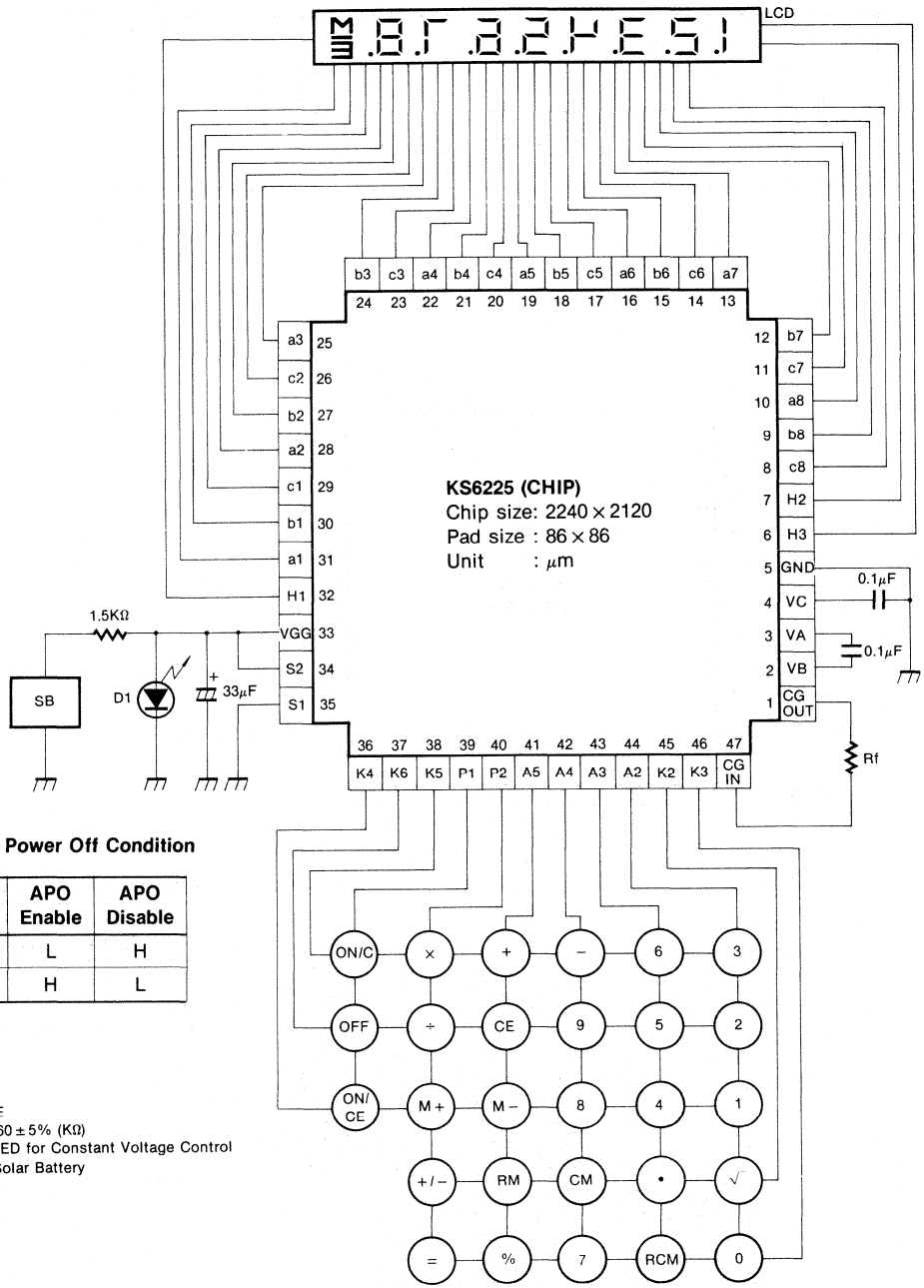

Auto Power Off Condition

Pin	APO Enable	APO Disable
S1	L	H
S2	H	L

*NOTE
Rf: 560 ± 5% (KΩ)
D1: LED for Constant Voltage Control
SB: Solar Battery

B. For use with a battery

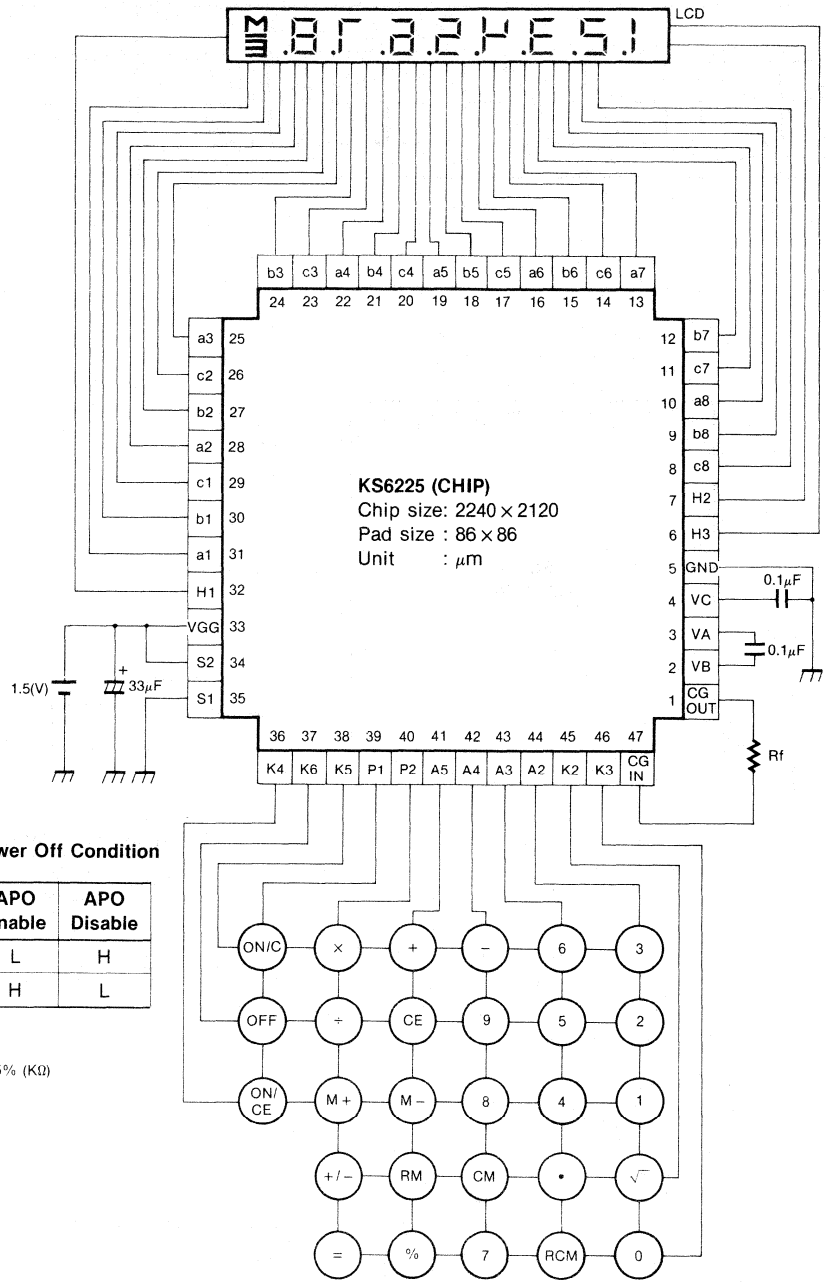

Auto Power Off Condition

Pin	APO Enable	APO Disable
S1	L	H
S2	H	L

*NOTE
Rf: 560 ± 5% (KΩ)

3

8.3 KS6325: 8 digits basic calculator with ON/C, ON/CE, CE

A. For use with a solar cell

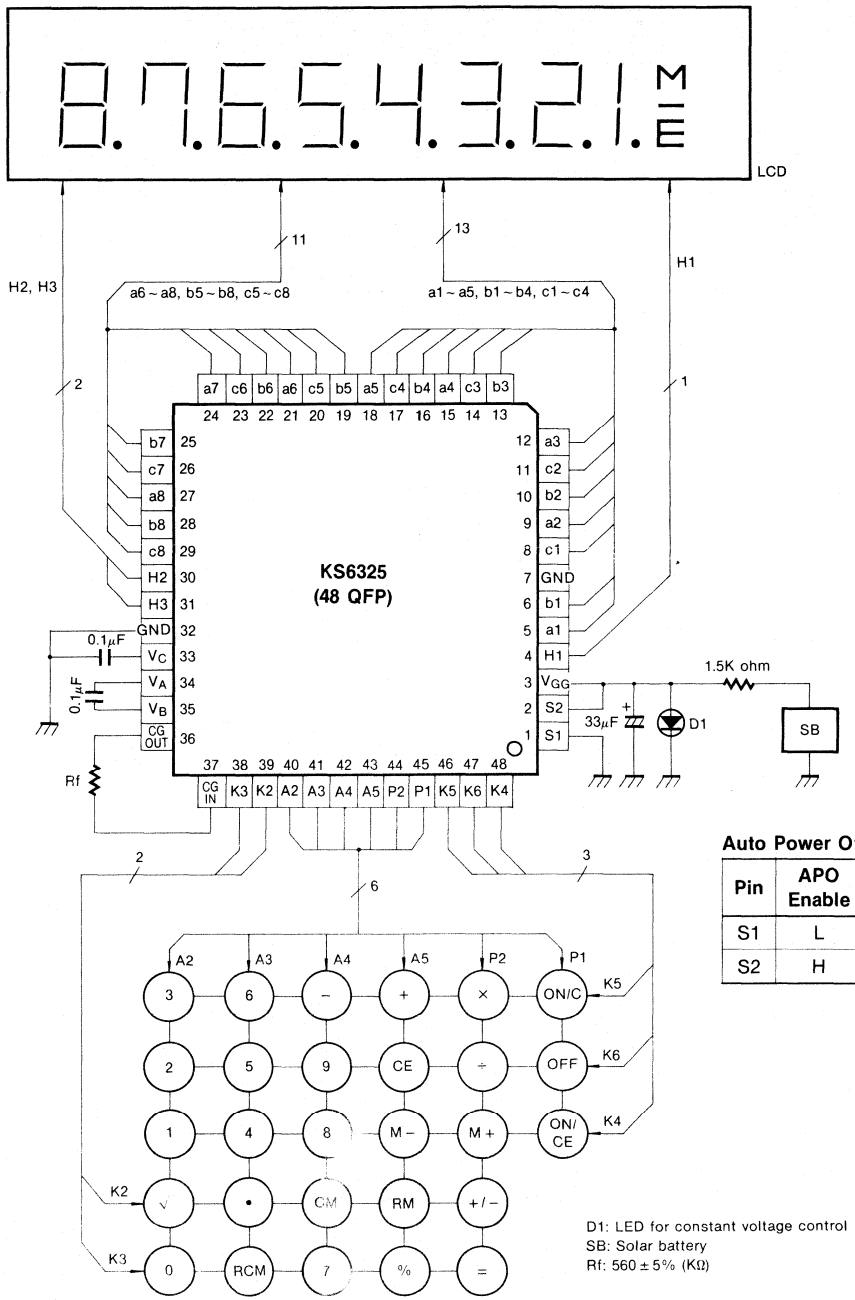

Auto Power Off Condition

Pin	APO Enable	APO Disable
S1	L	H
S2	H	L

D1: LED for constant voltage control
SB: Solar battery
Rf: 560 ± 5% (KΩ)

B. For use with a battery

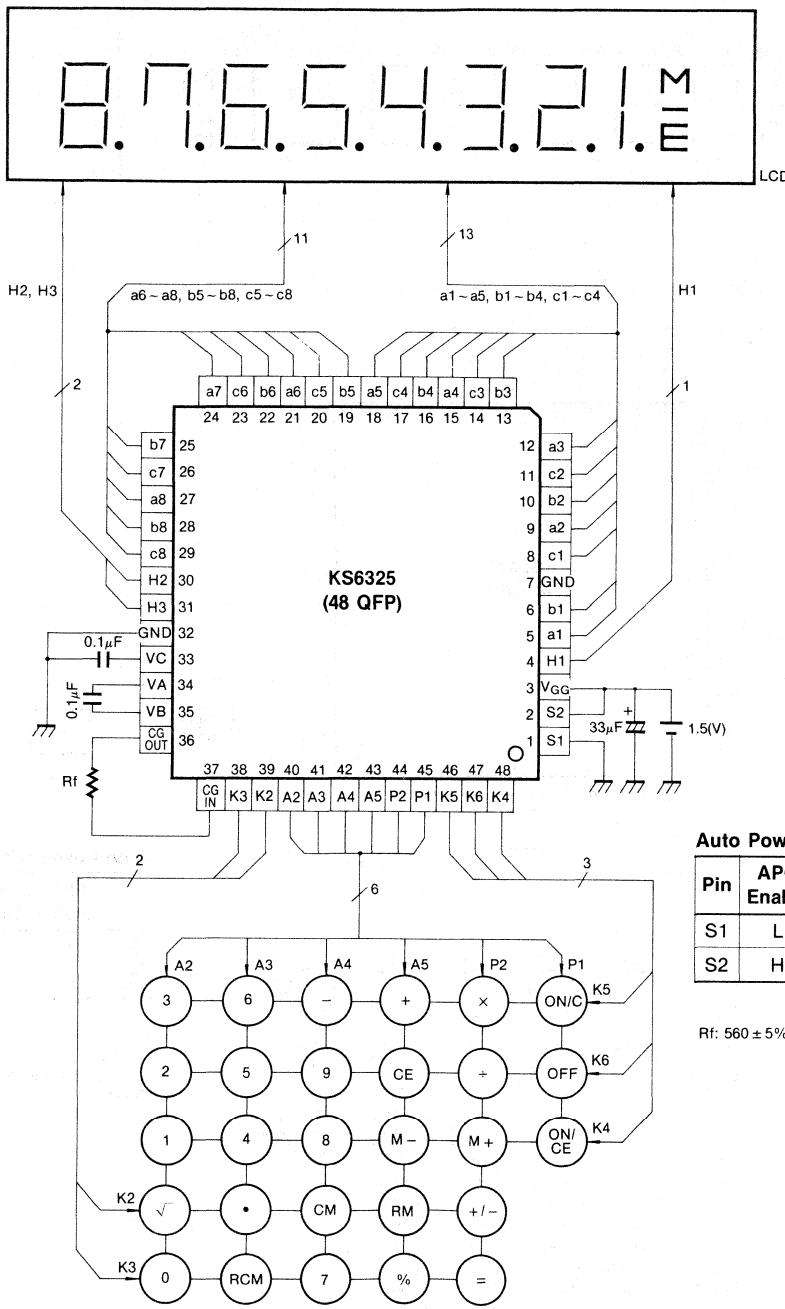

Auto Power Off Condition

Pin	APO Enable	APO Disable
S1	L	H
S2	H	L

Rf: 560 ± 5% (KΩ)

8.4 KS6425: 8 digits basic calculator with punctuation comma and ON/C, ON/CE, CE

A. For use with a solar cell

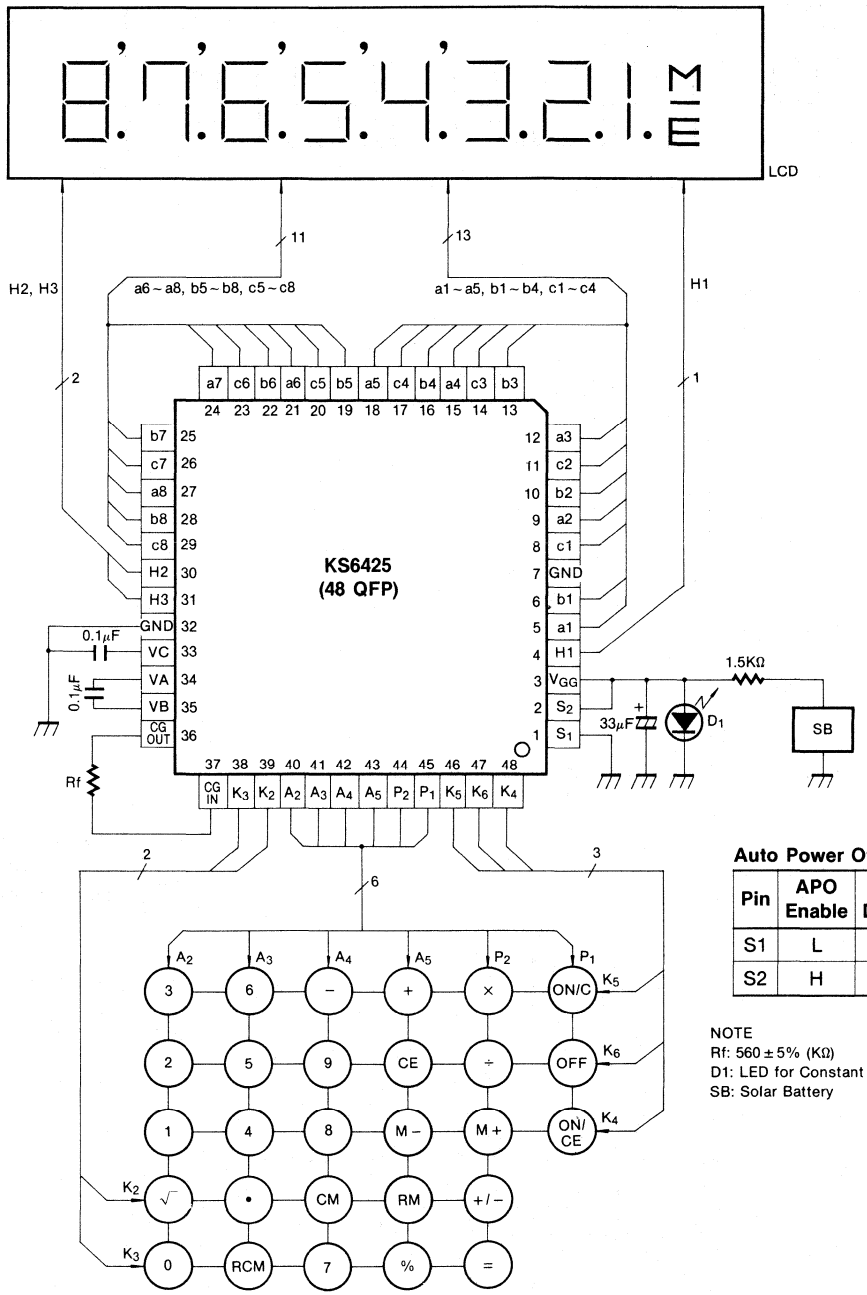

Auto Power Off Condition

Pin	APO Enable	APO Disable
S1	L	H
S2	H	L

NOTE
Rf: 560 ± 5% (KΩ)
D1: LED for Constant Voltage Control
SB: Solar Battery

B. For use with a battery

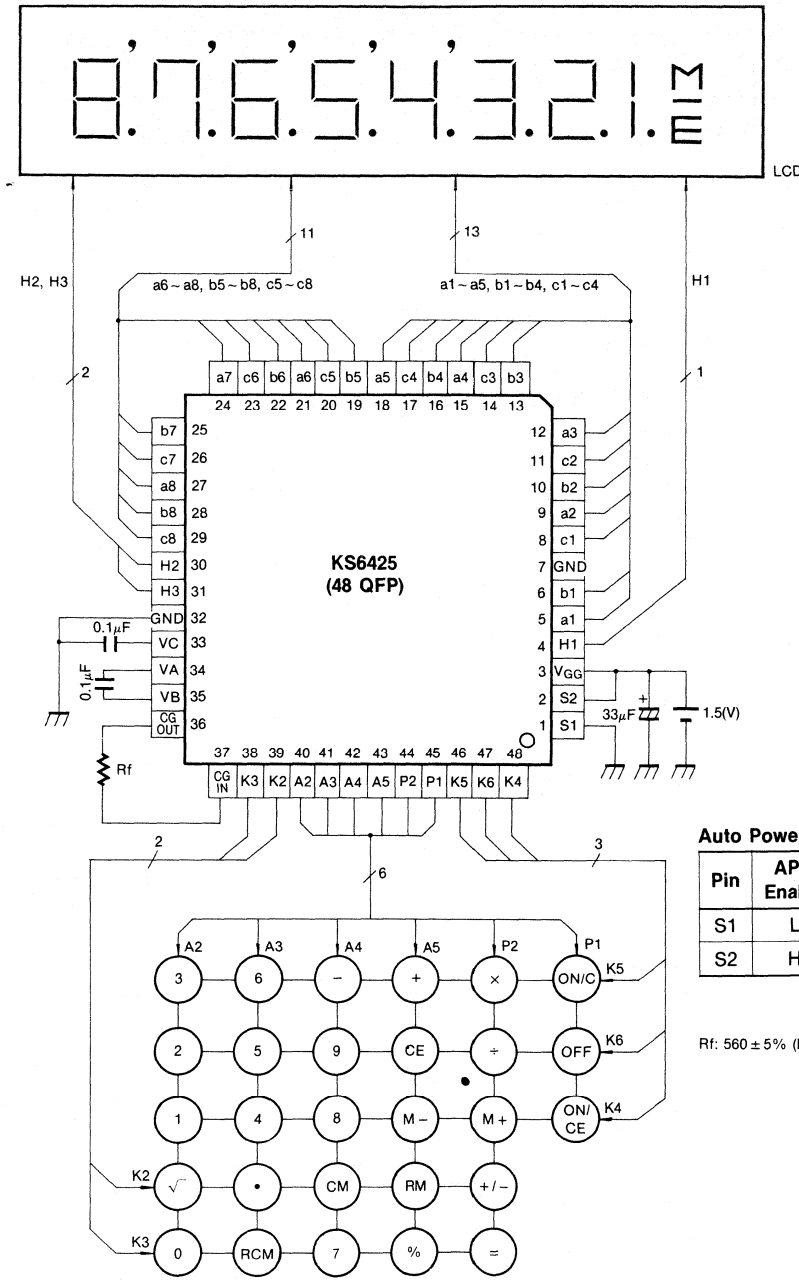

Auto Power Off Condition

Pin	APO Enable	APO Disable
S1	L	H
S2	H	L

Rf: 560 ± 5% (KΩ)

3

8.5 KS6525: 8 digits basic calculator with touch tone, punctuation comma and ON/C, ON/CE, CE

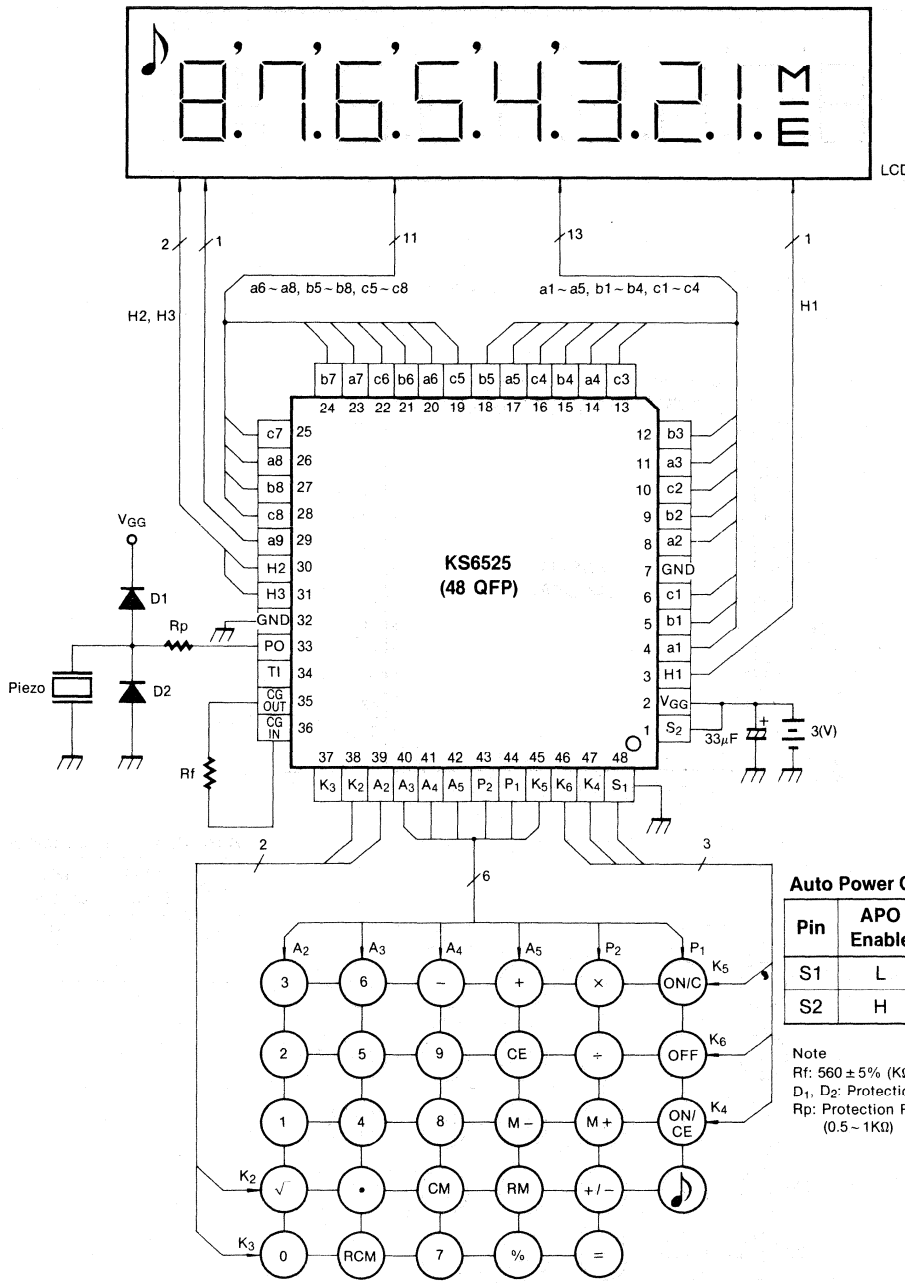

Auto Power Off Condition

Pin	APO Enable	APO Disable
S1	L	H
S2	H	L

Note
Rf: 560 ± 5% (KΩ)
D_1, D_2: Protection Diode
Rp: Protection Resistor (0.5 ~ 1KΩ)

8.6 KS6126: 8 digits basic calculator with internal voltage limiter and ON/AC, ON/CCE, CCE

A. For use with a solar cell

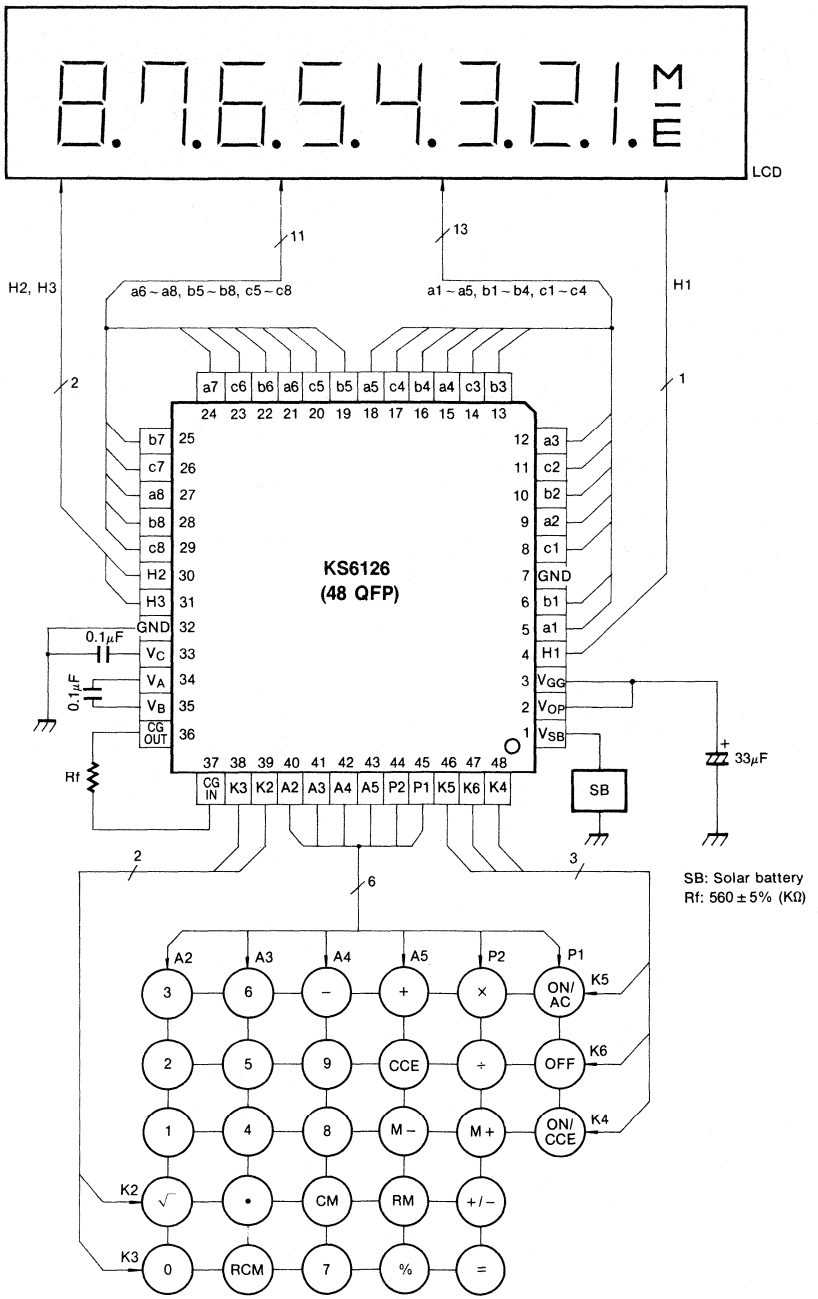

B. For use with a battery

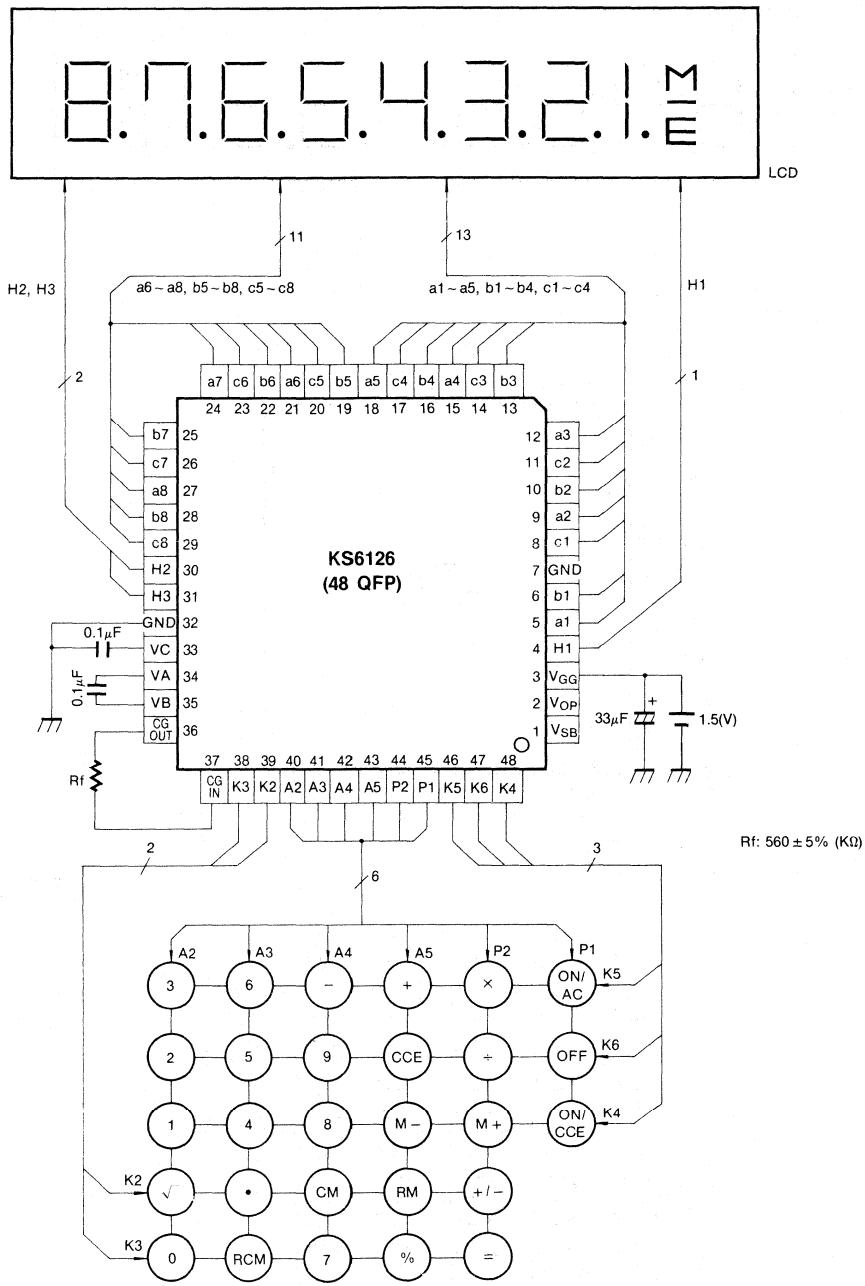

8.7 KS6326: 8 digits basic calculator with internal voltage limiter and ON/C, ON/CE, CE

A. For use with a solar cell

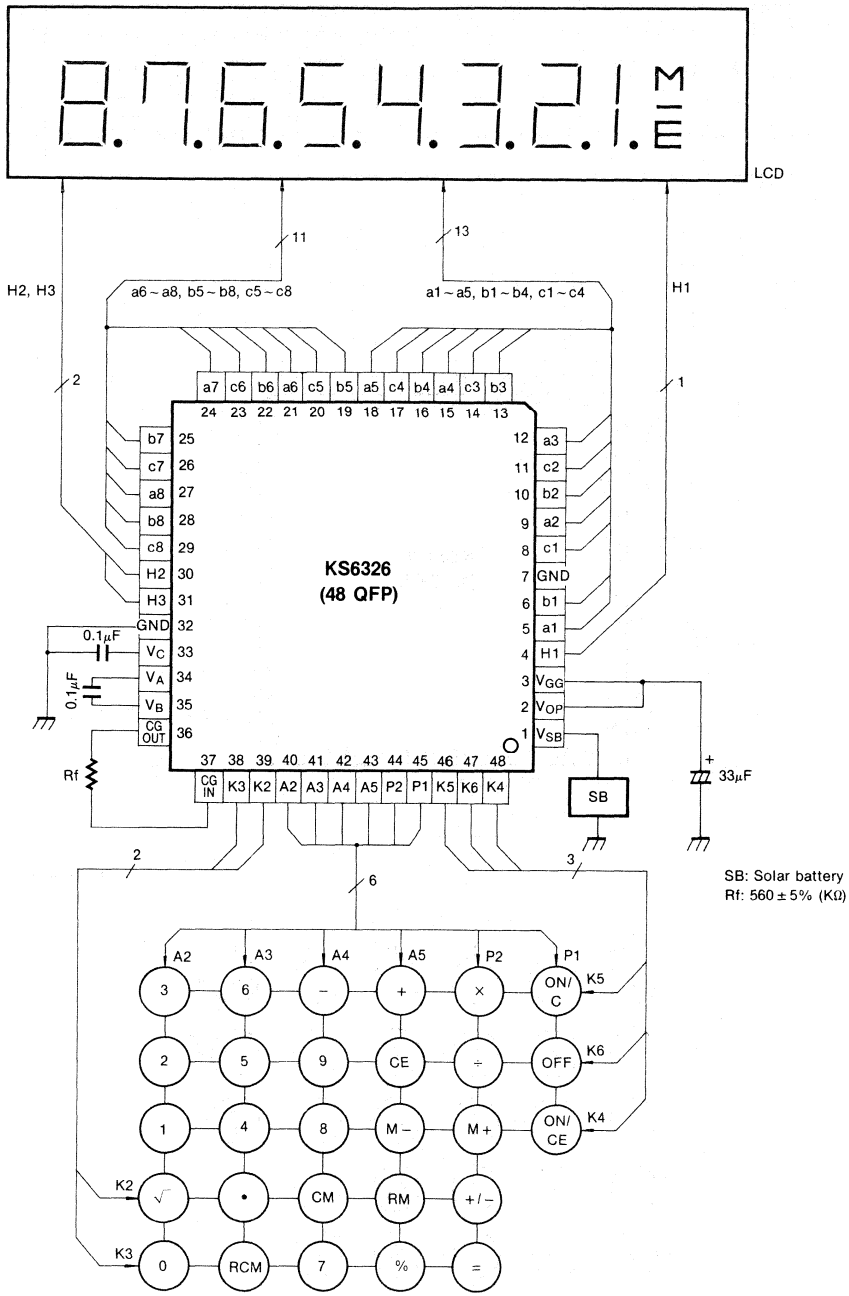

B. For use with a battery

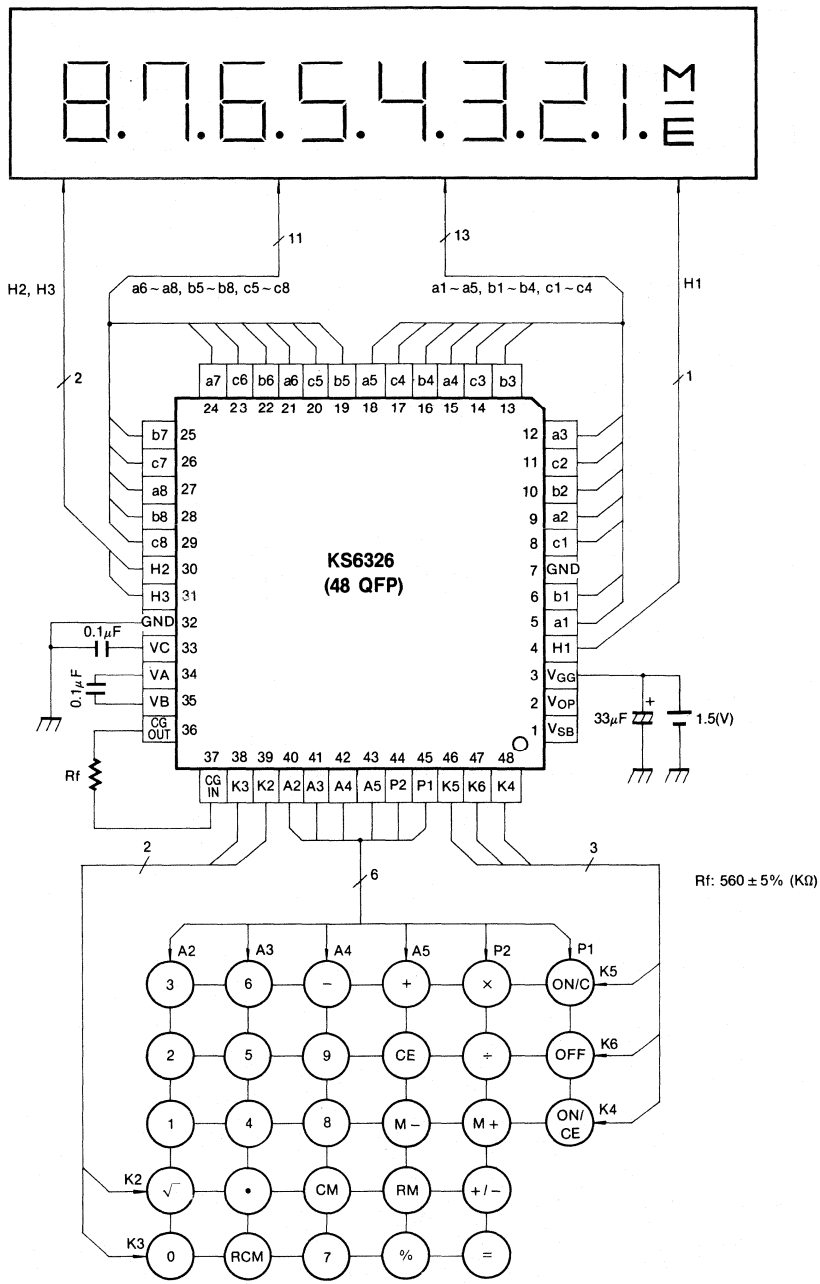

8.8 KS6129: 10 digits basic calculator with ON/AC, ON/CCE, CCE

A. For use with a solar cell

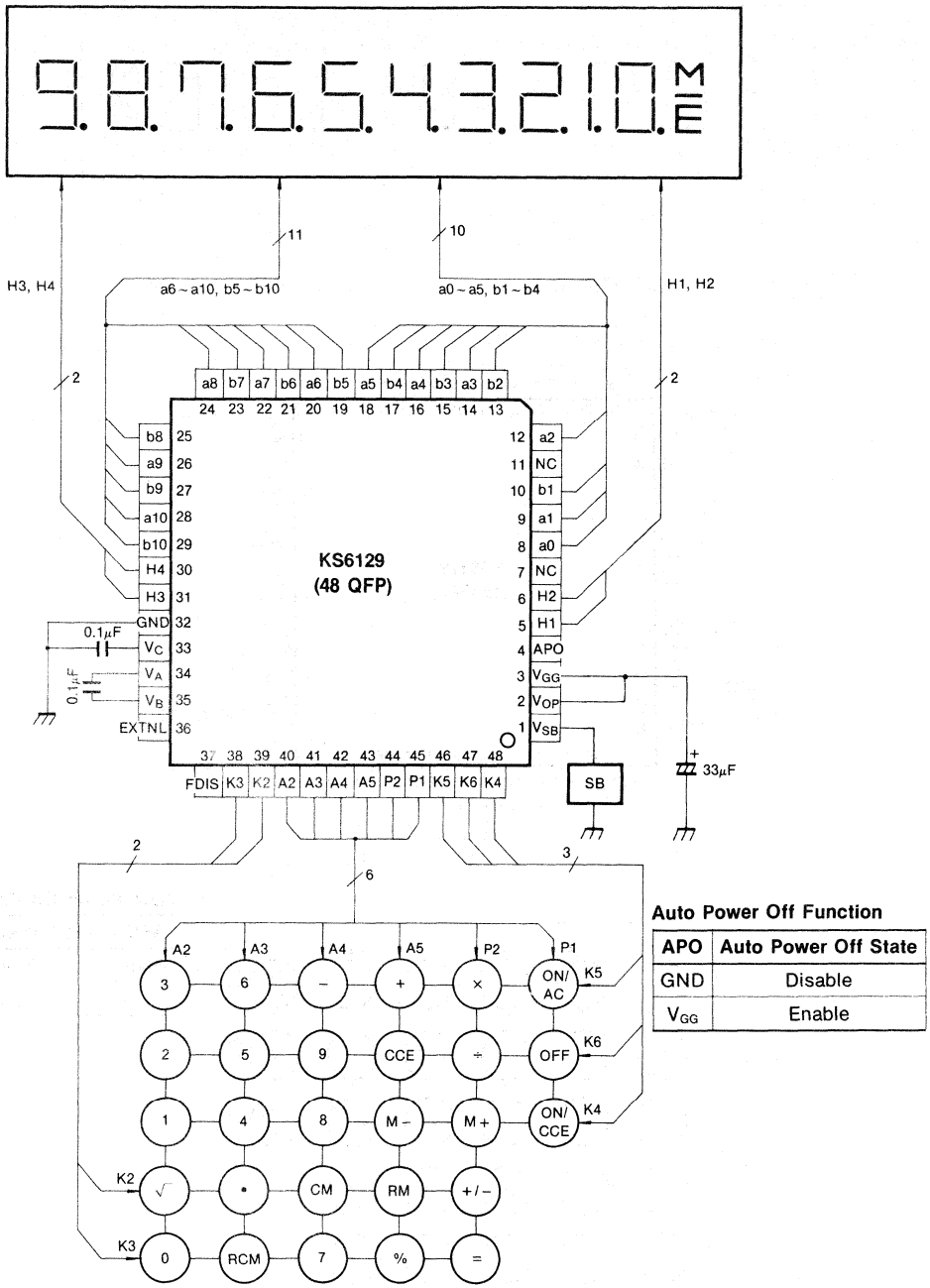

Auto Power Off Function

APO	Auto Power Off State
GND	Disable
V_{GG}	Enable

B. For use with a battery

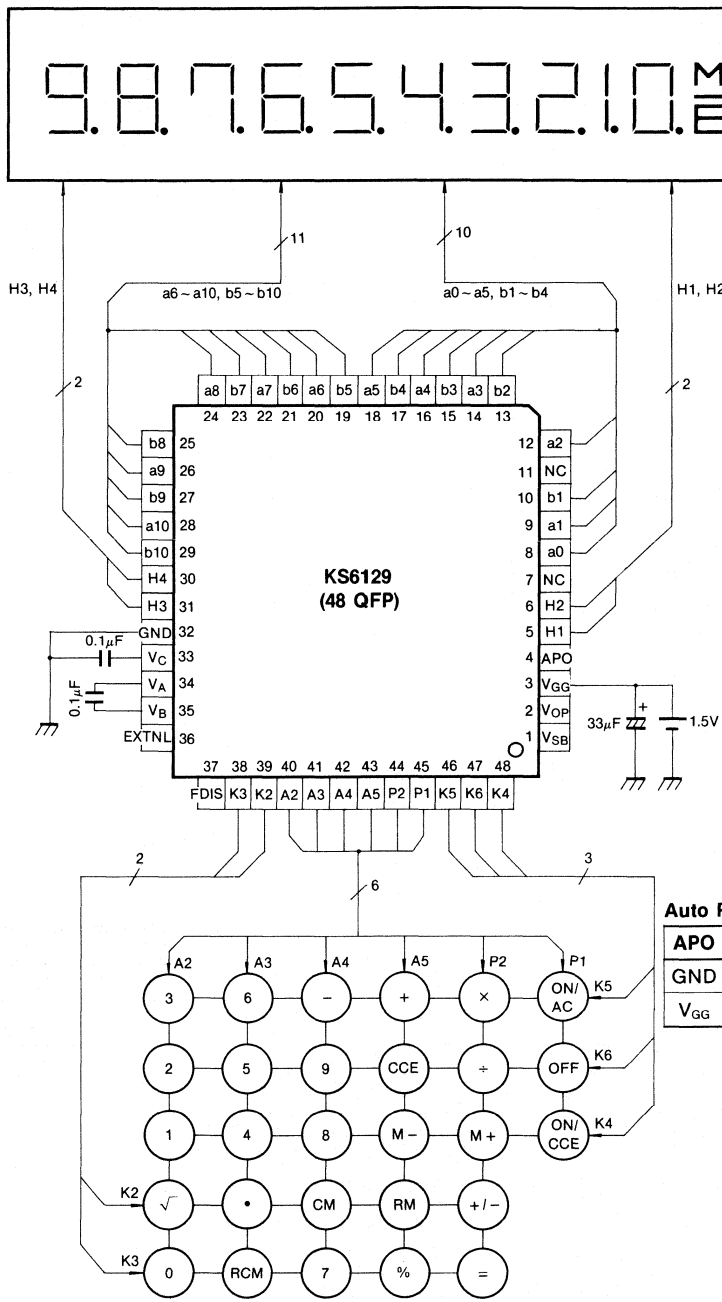

Auto Power Off Function

APO	Auto Power Off State
GND	Disable
V_{GG}	Enable

8.9 KS6429: 10 digits basic calculator with punctuation comma and ON/C, ON/CE, CE

A. For use with a solar cell

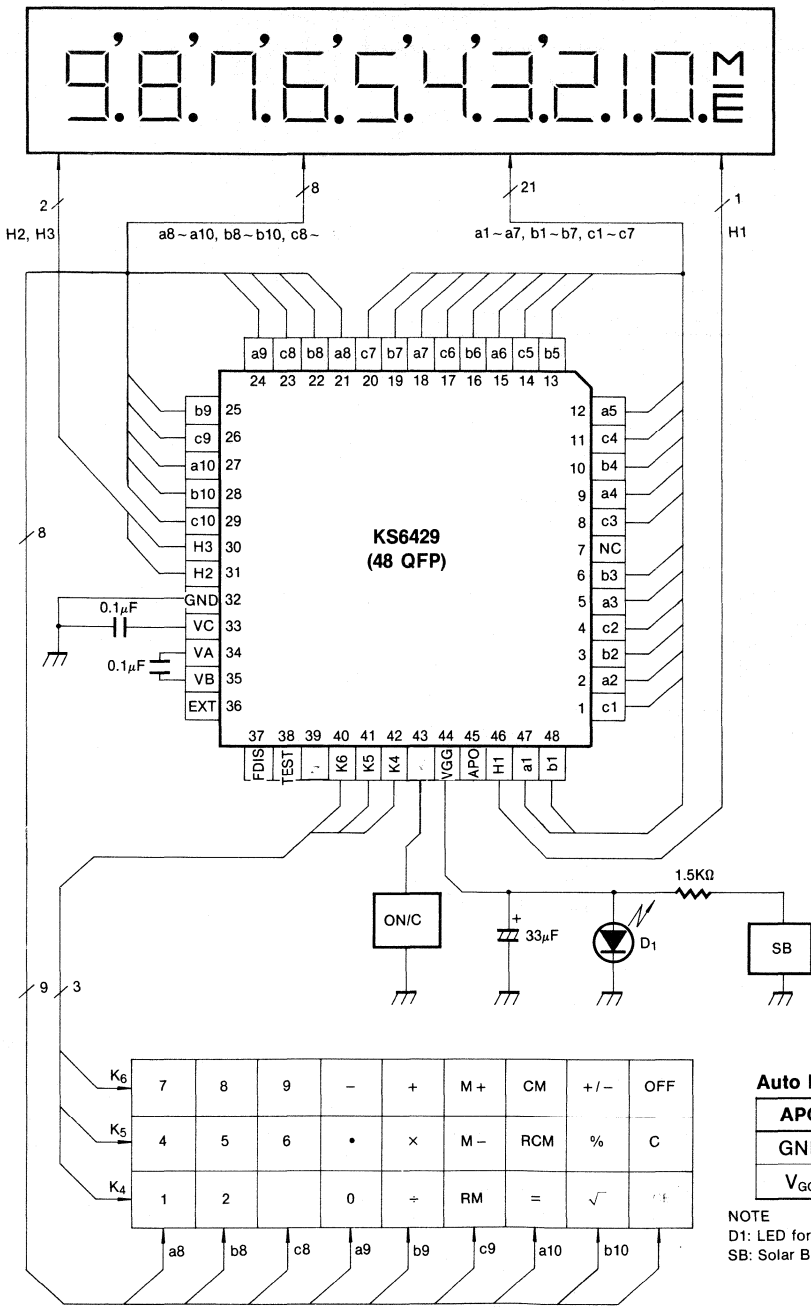

Auto Power Off Function

APO	APO State
GND	Disable
V_{GG}	Enable

NOTE
D1: LED for Constant Voltage Control
SB: Solar Battery

B. For use with a battery

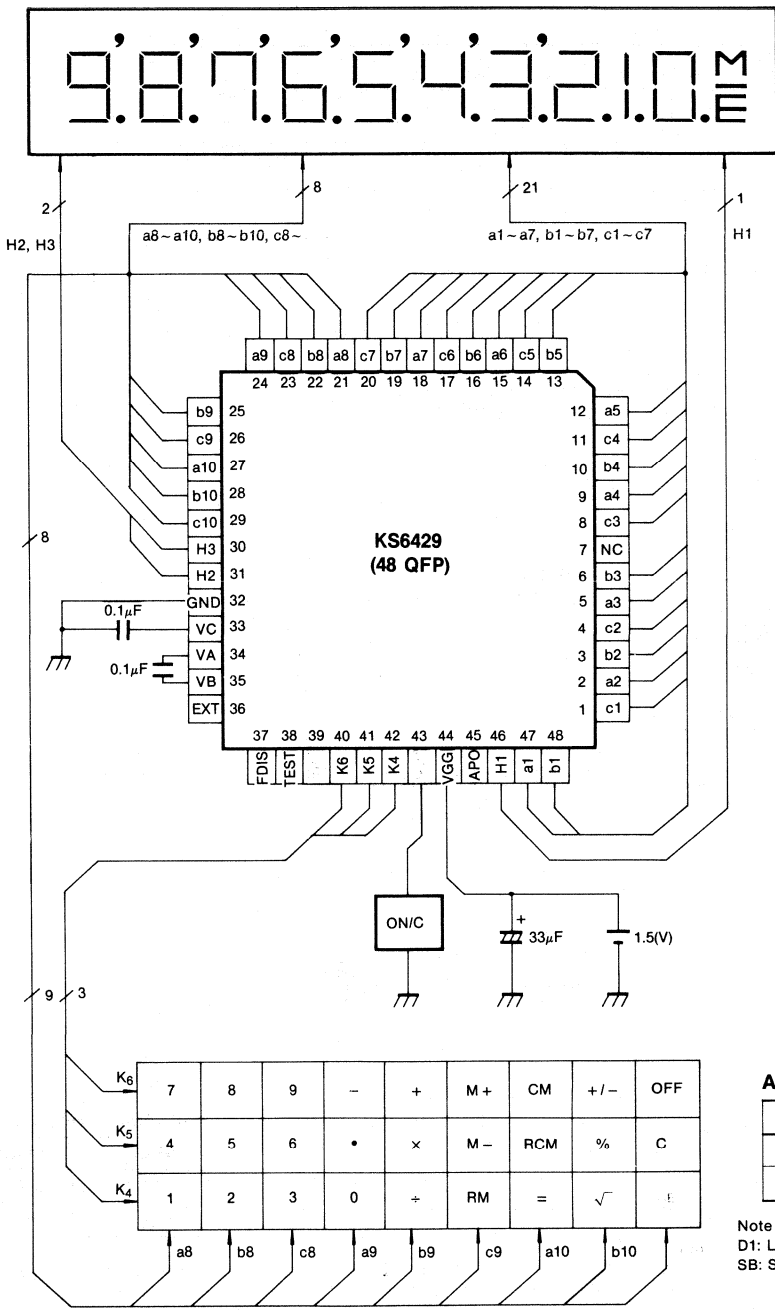

Auto Power Off Function

APO	APO State
GND	Disable
V_{GG}	Enable

Note
D1: LED for constant voltage control
SB: Solar battery

8.10 KS6027: 10/12 digits desk top calculator

For use with bare chip

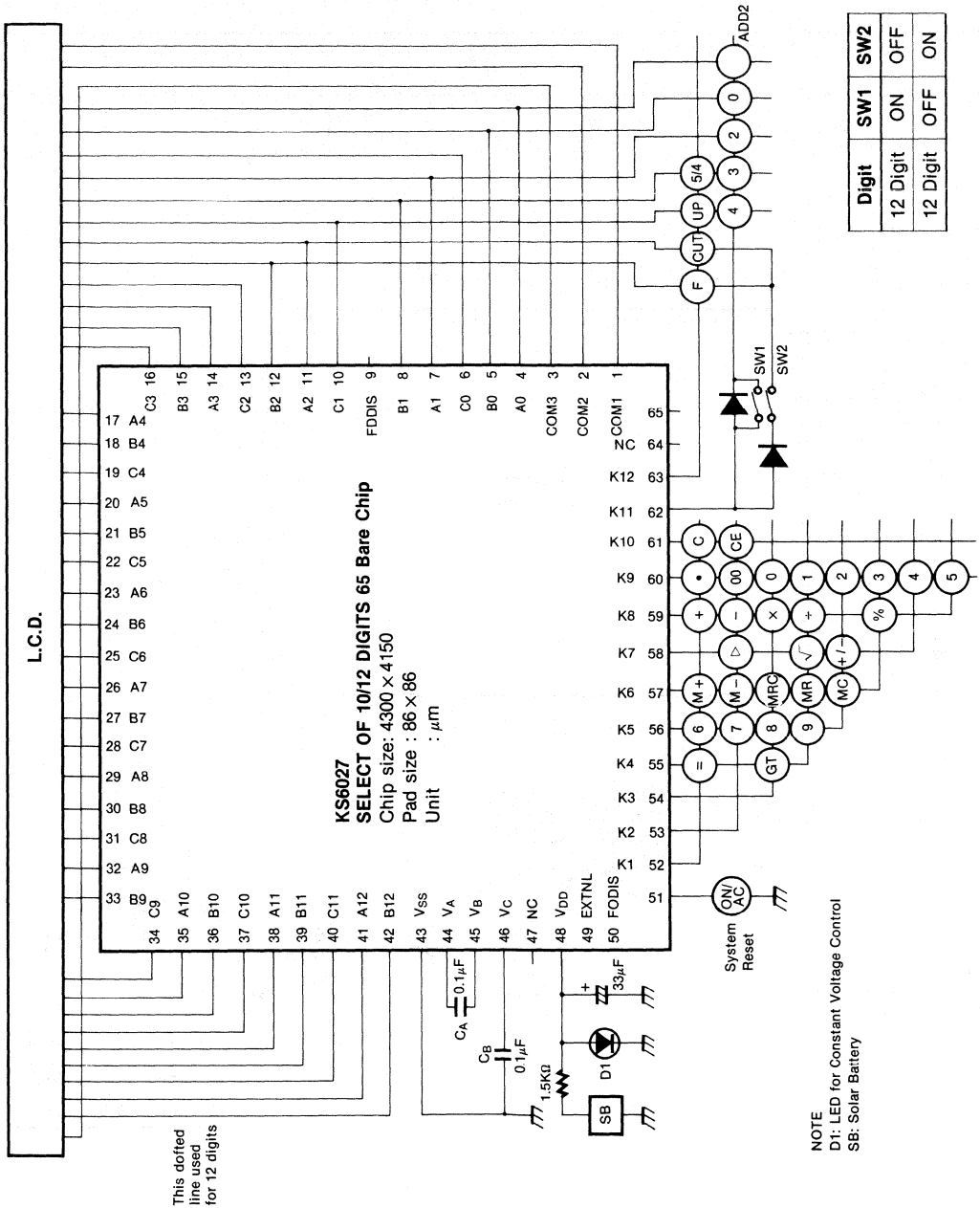

Digit	SW1	SW2
12 Digit	ON	OFF
12 Digit	OFF	ON

8.11 KS6077: 10/12 digits desk top calculator

For use with 64 QFP package type

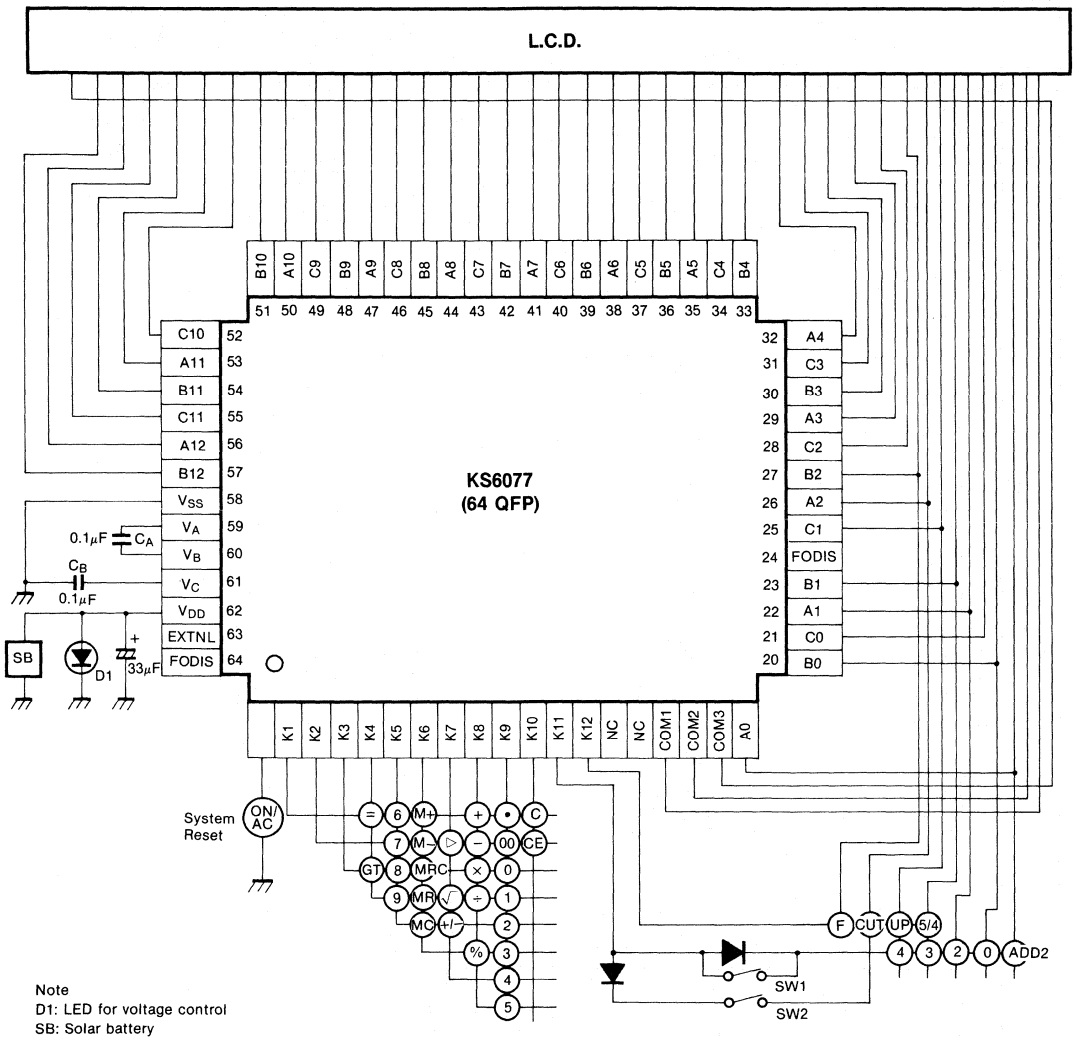

Note
D1: LED for voltage control
SB: Solar battery

Digit	SW1	SW2
12 Digit	ON	OFF
12 Digit	OFF	ON

8.12 KS6042: 10 digits scientific calculator

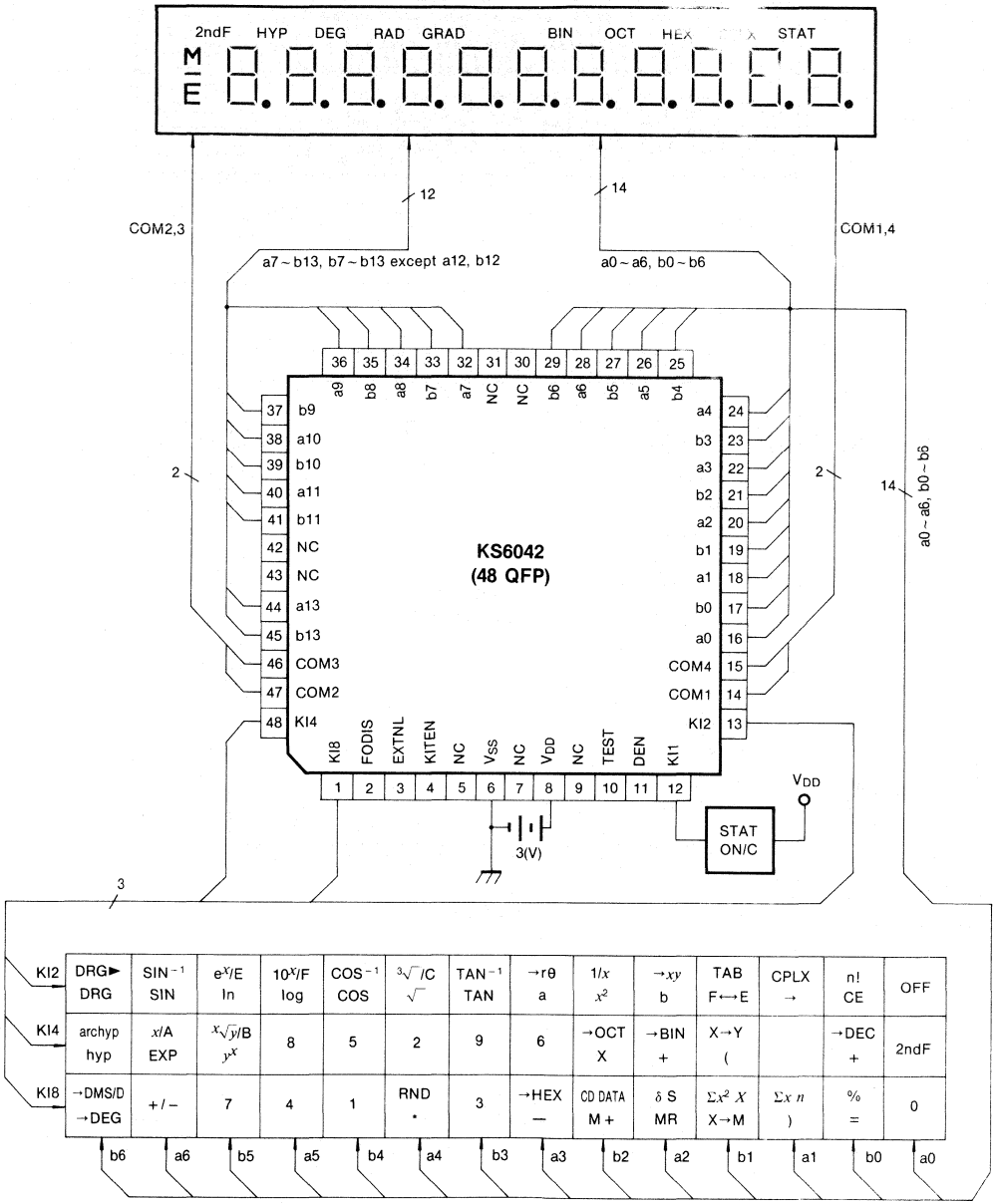

* NOTE

2nd F	2ndF/HEX
1st F	1st F

8.13 KS6033

20 MEMORY DATA BANK

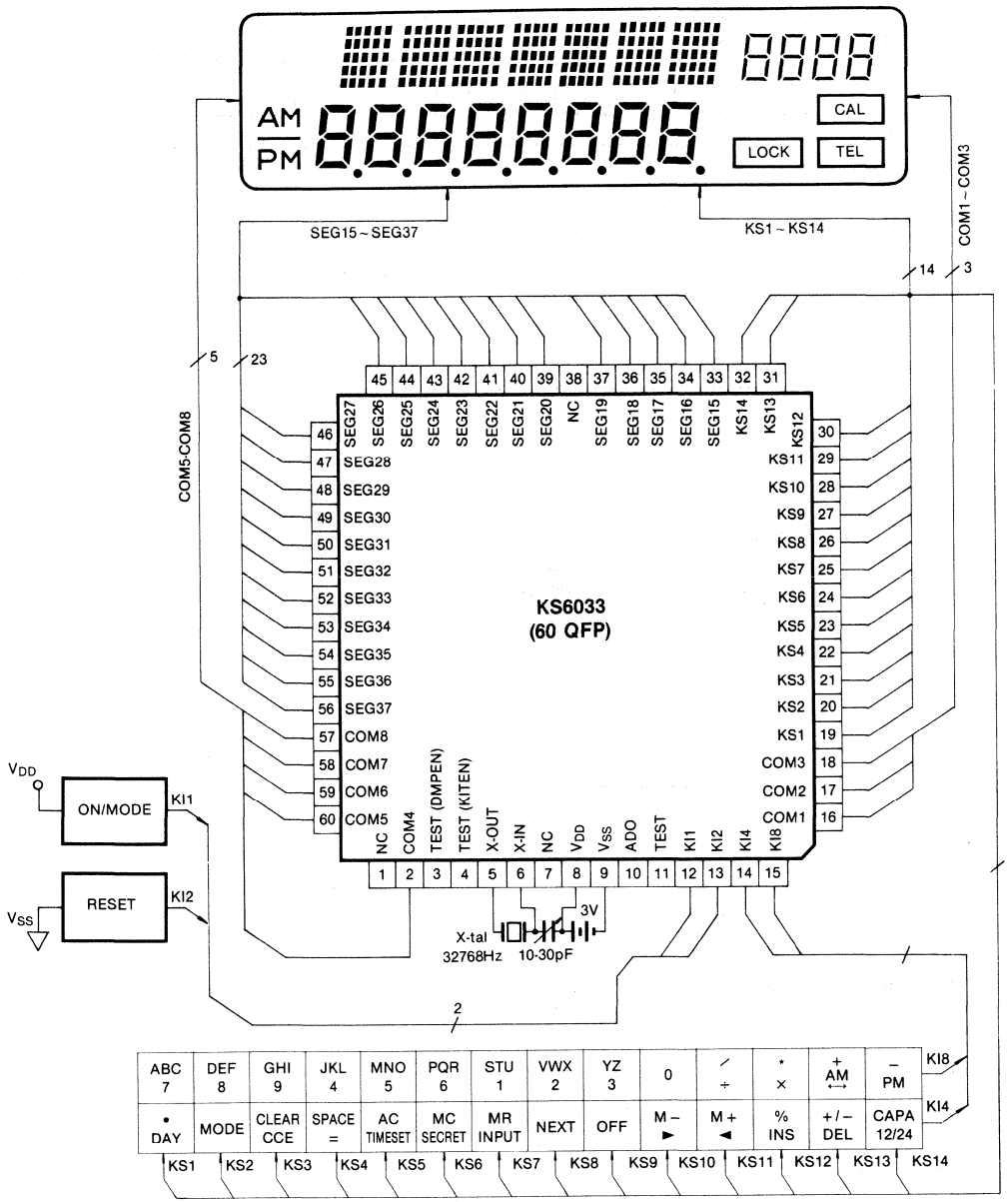

(1) ADO function

ADO→V_{DD}	enable
ADO→V_{SS}	disable

(2) LCD function

When connecting V_{SS} and KI8, All symbol is displayed for LCD test.

* The backside of the chip must be biased to V_{DD}

8.14 KS6035: 50 memory data bank

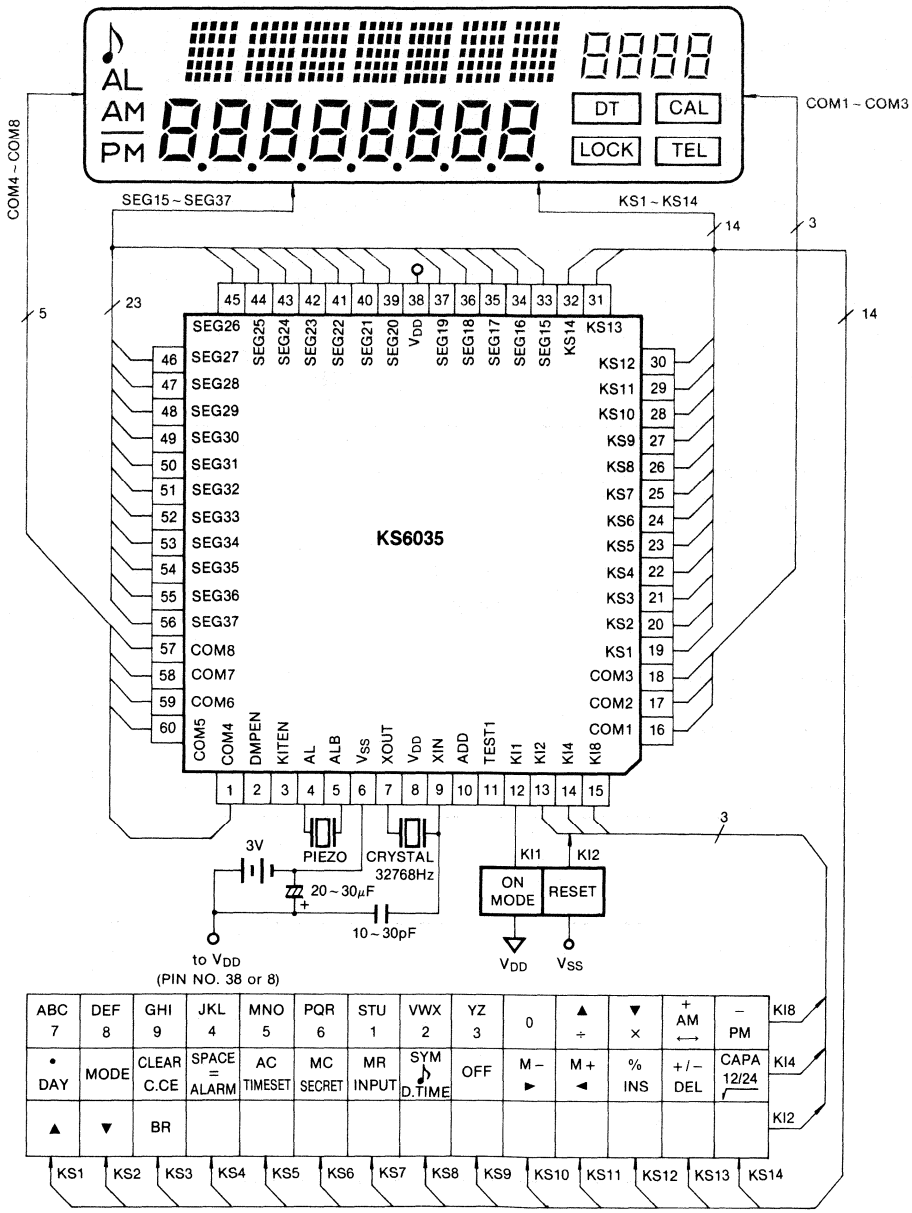

(1) ADD function

ADO→V_{DD}	Enable
ADO→V_{SS}	Disable

(2) LCD function

When connection V_{SS} and KI8, all system is displayed for LCD test.

* The backside of the chip must be biased to V_{DD}

9. DATA BANK

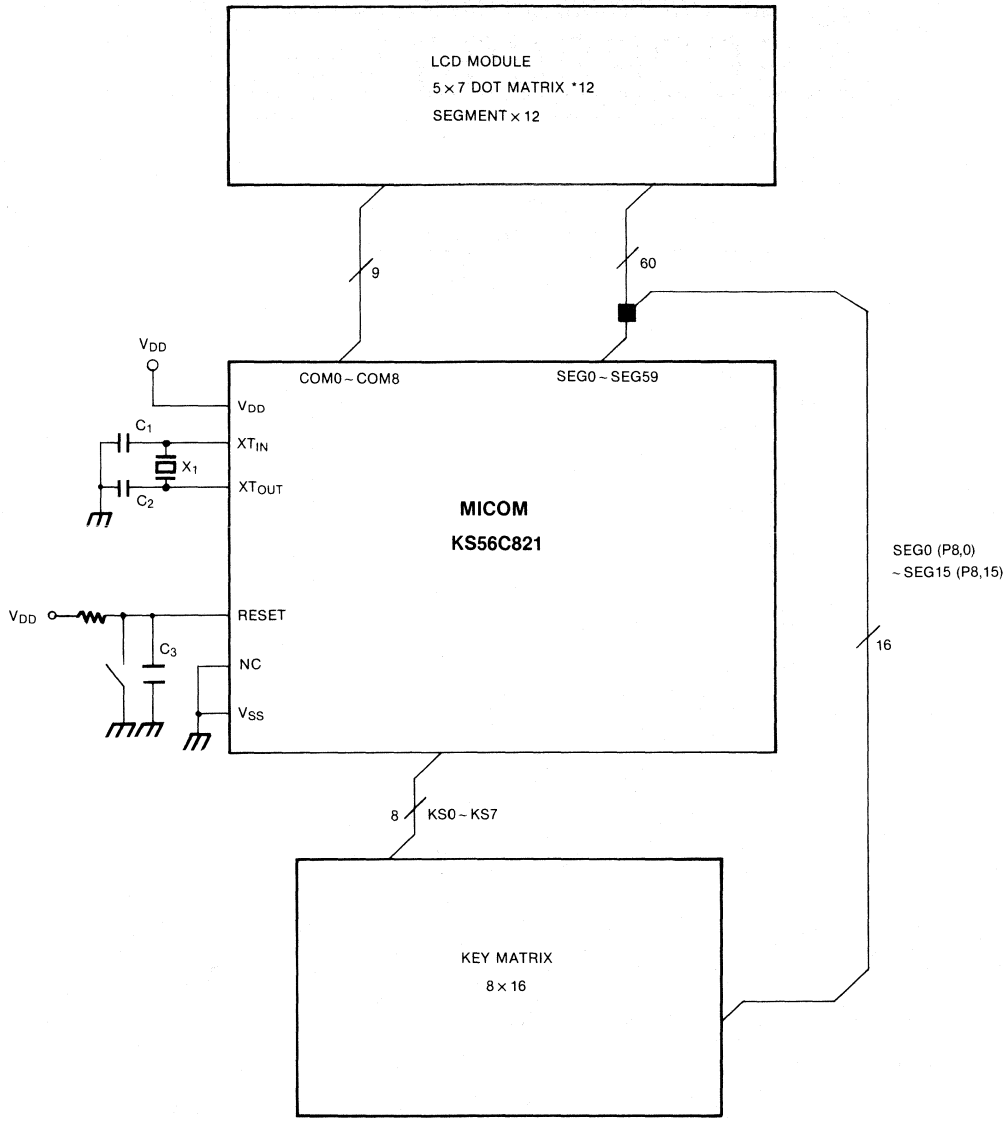

X_1 : 32768Hz CRYSTAL
C_1 : 22pF CAPACITOR
C_2 : 33pF CAPACITOR
C_3 : 4.7μF CAPACITOR
R_1 : 470KΩ RESISTOR

† New Product

10. DATA CONVERTER IC APPLICATION

10.1 KAD0206, KDA0406

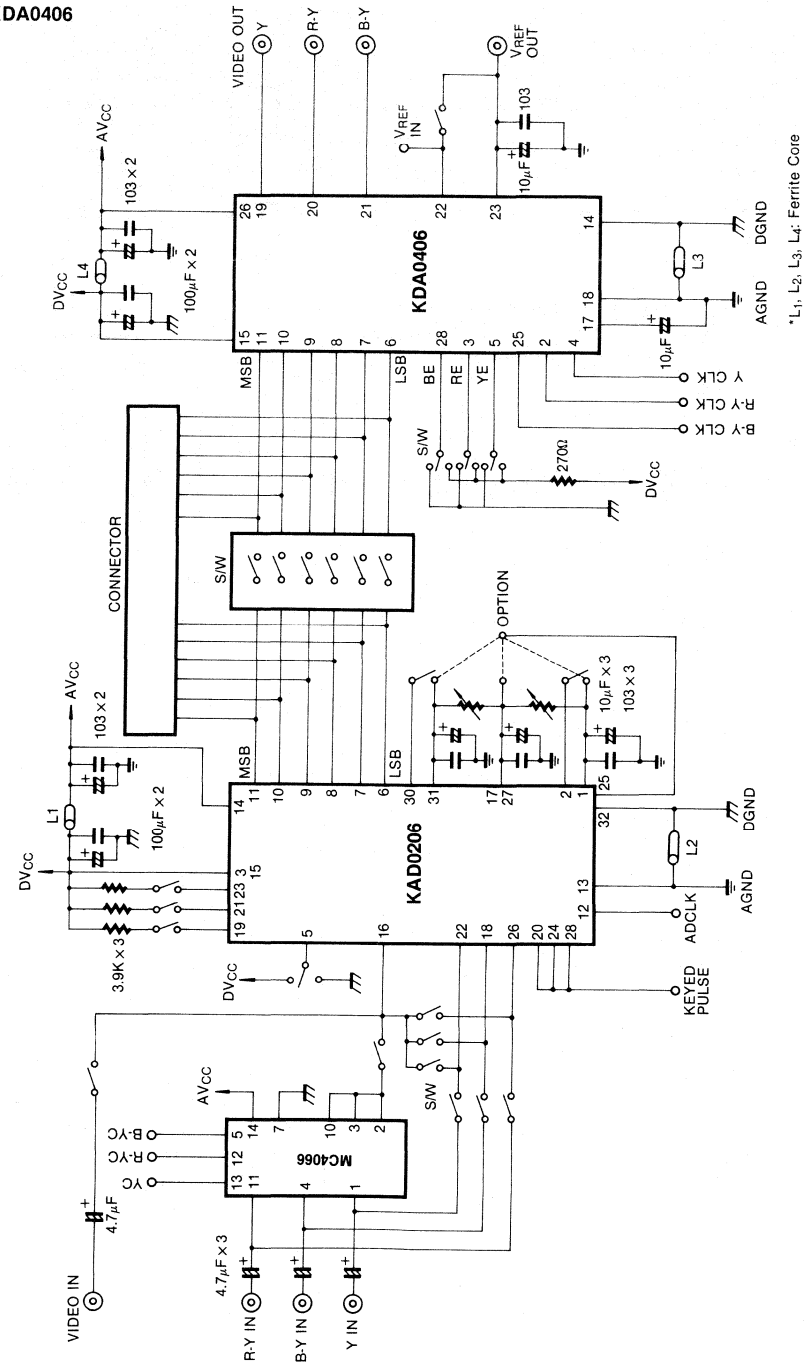

3

10.2 KSV3208, KDA3310

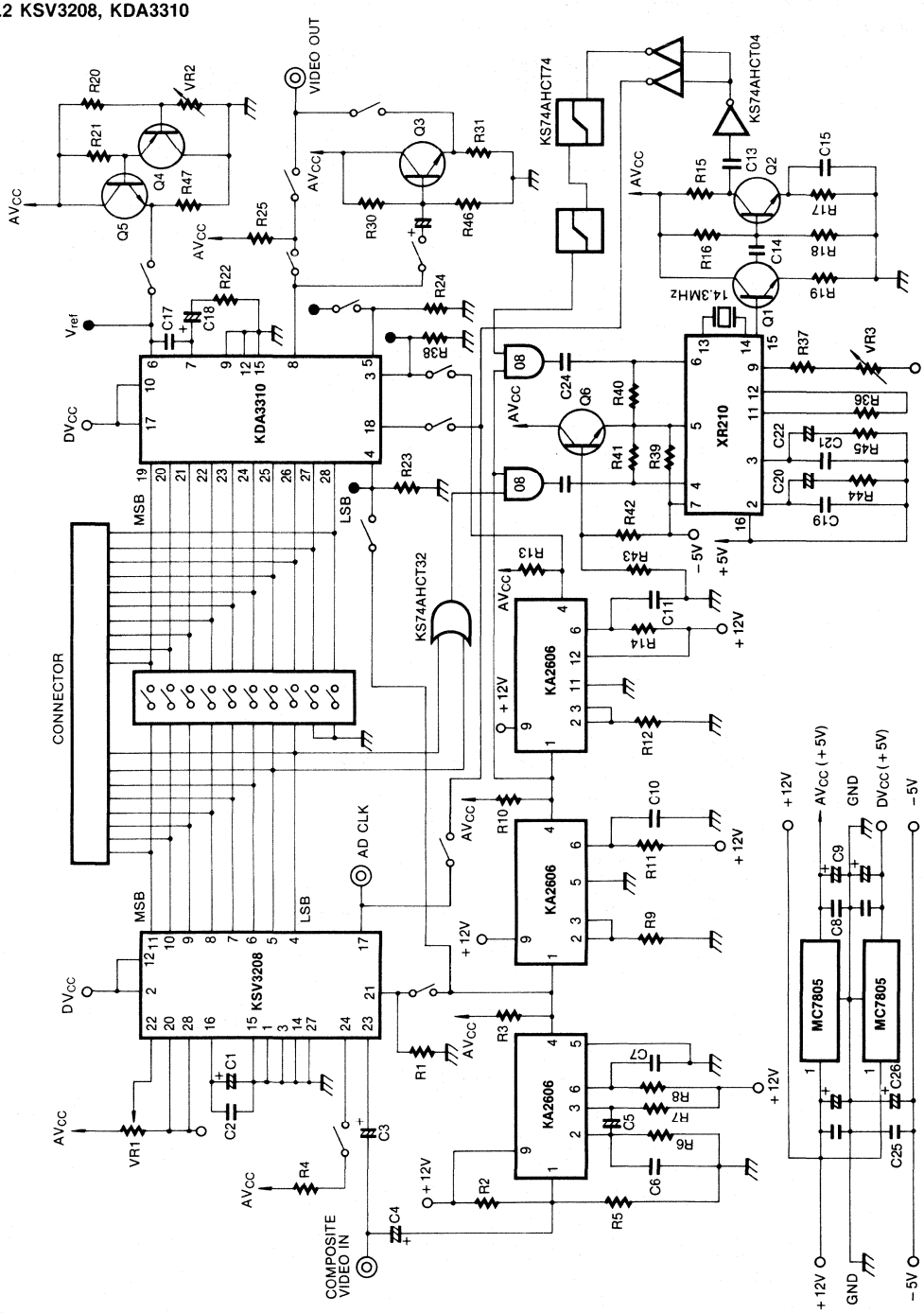

11. TOY BLOCK DIAGRAM

11.1 Radio Control Receiver

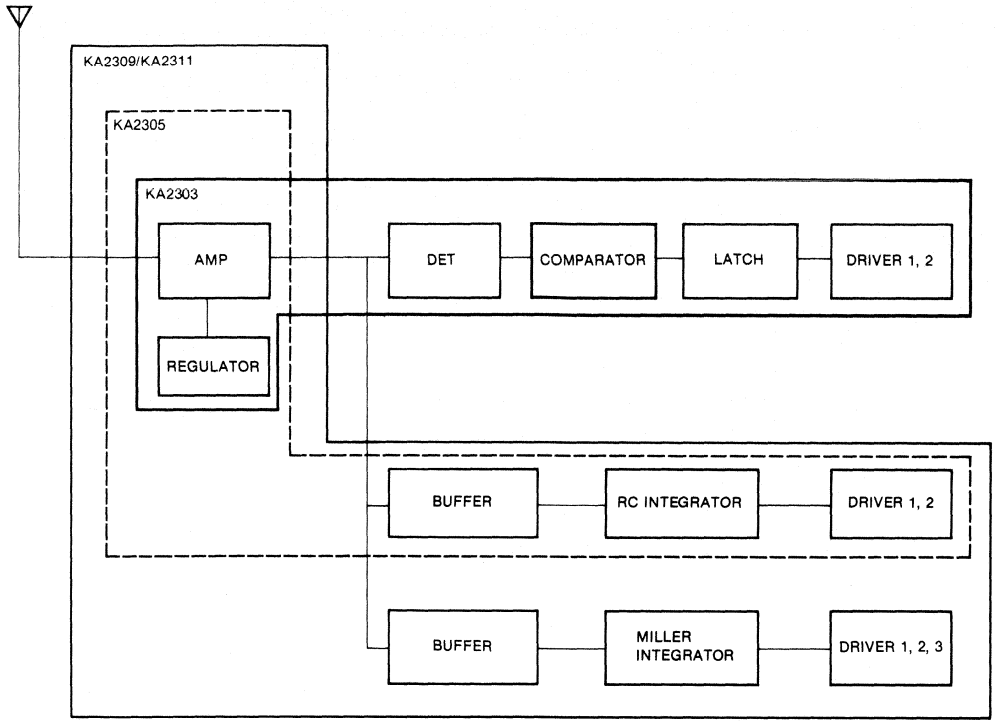

11.2 Transmitter

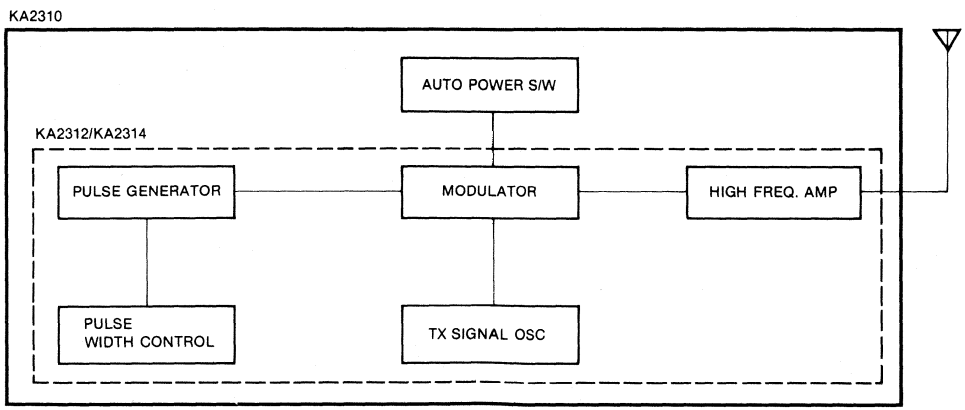

NOTES

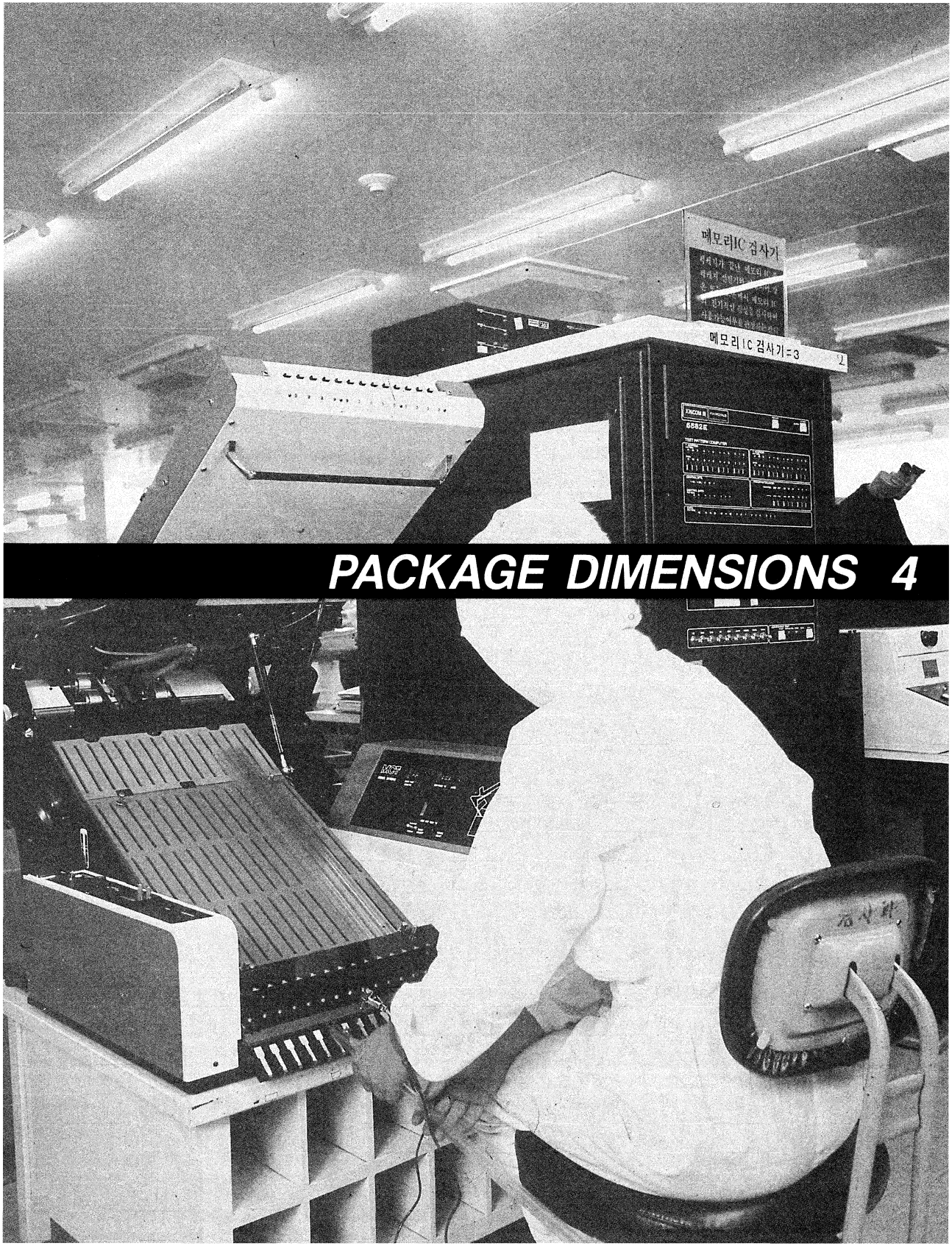

PACKAGE DIMENSIONS 4

PACKAGE DIMENSIONS

Dimensions in Millimeters

8-DIP-300

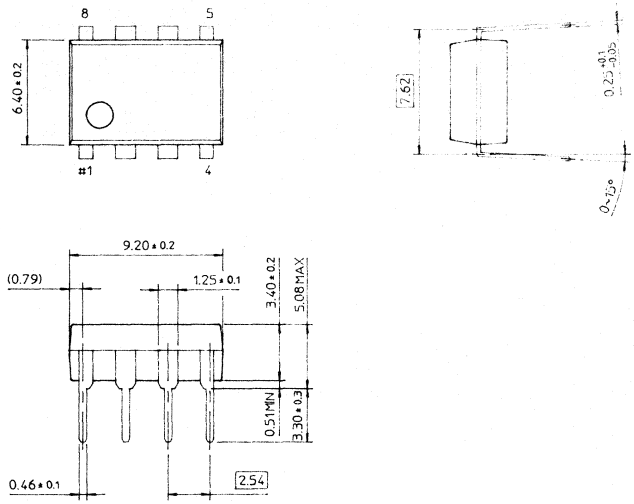

12-DIPH-300

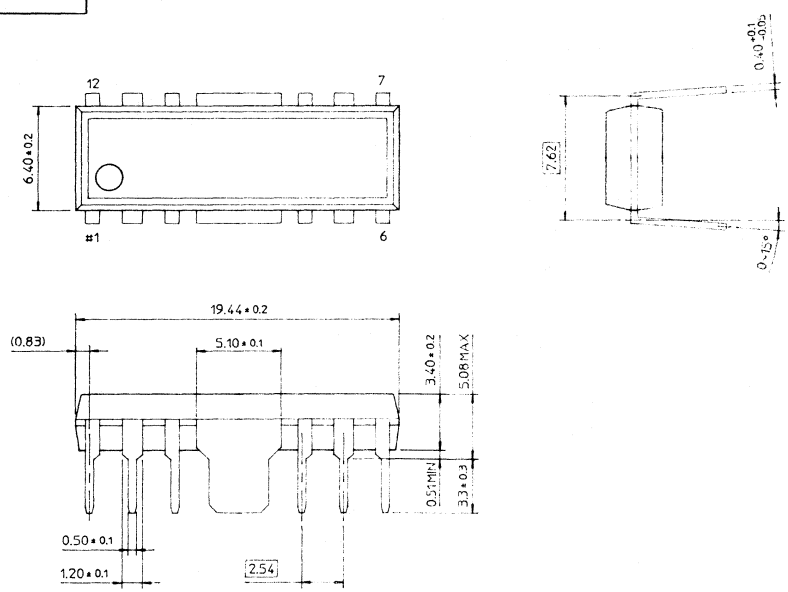

4

PACKAGE DIMENSIONS

Dimensions in Milimeters

14-DIPH-300

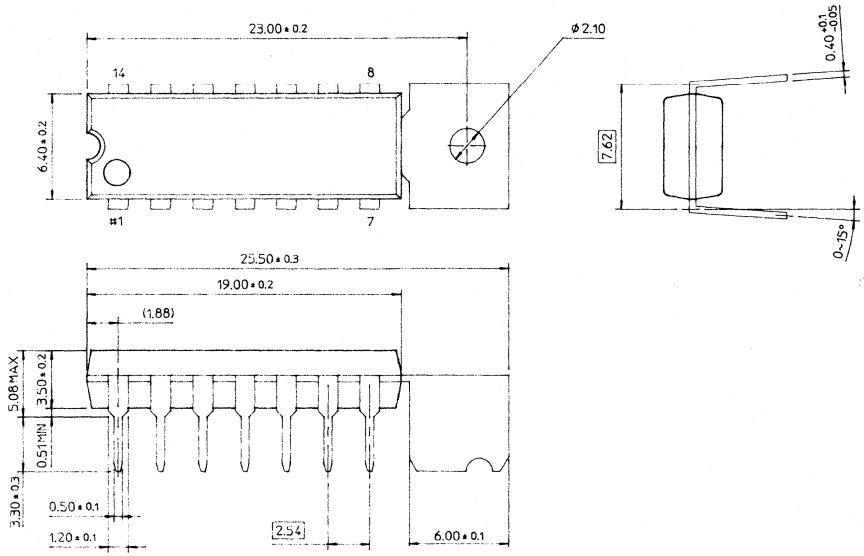

16-DIP-300A

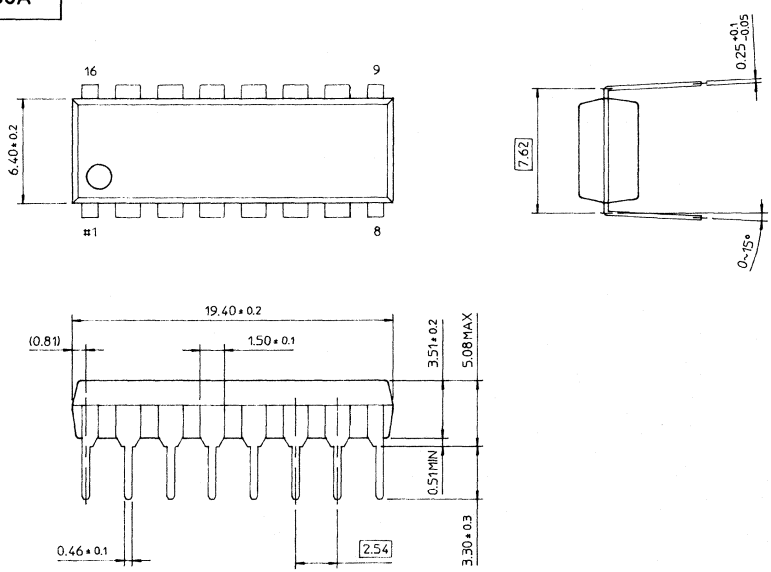

Dimensions in Milimeters

18-DIP-300A

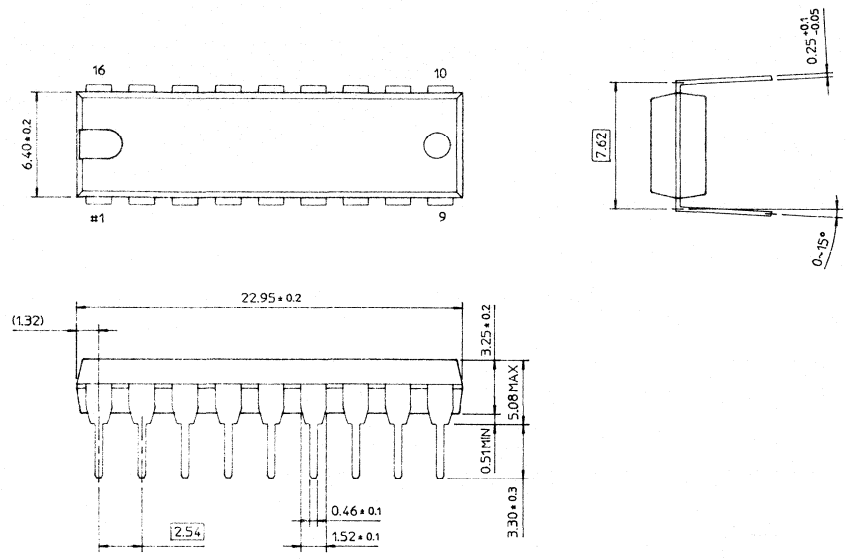

20-DIP-300A

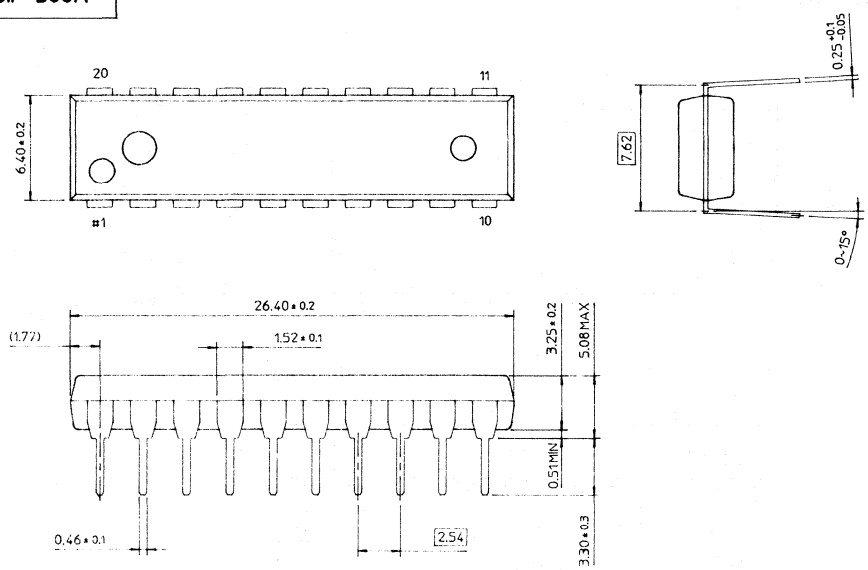

4

Dimensions in Milimeters

22-DIP-400

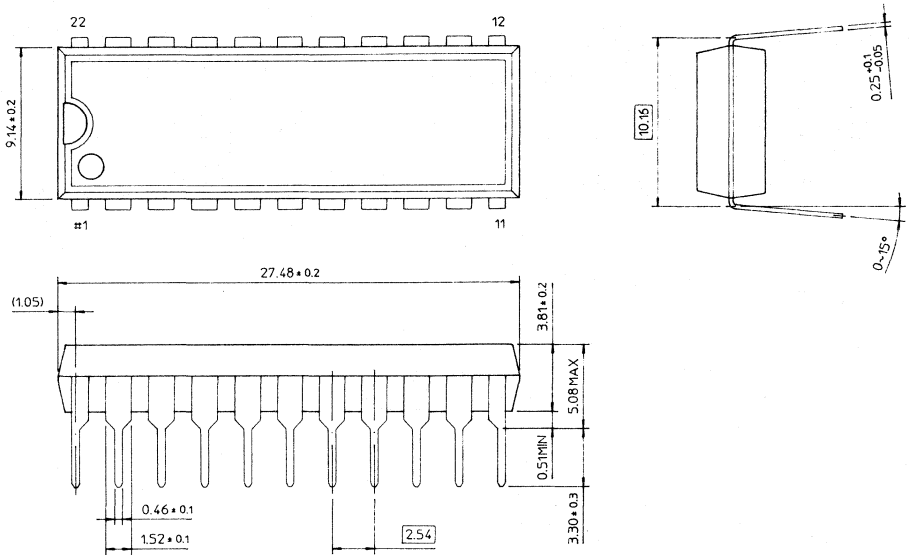

24-DIP-600B

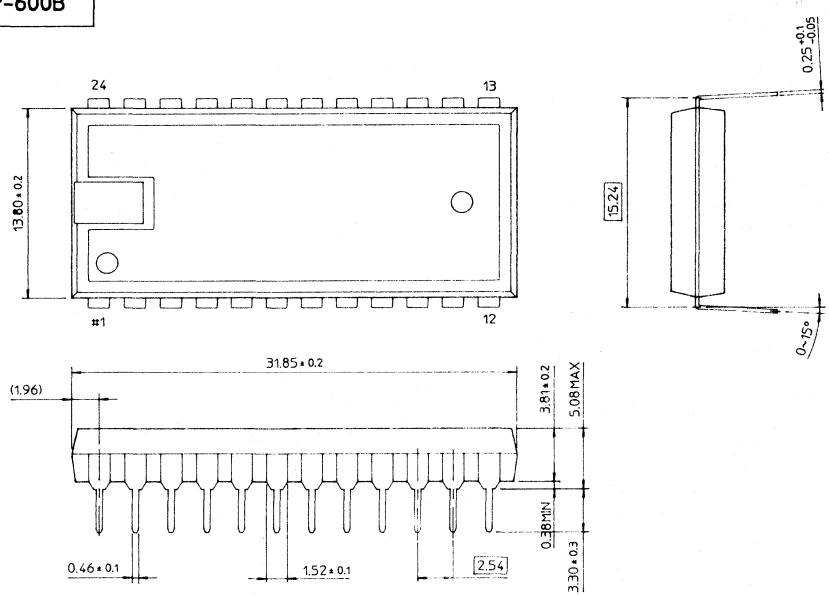

Dimensions in Milimeters

28-DIP-600A

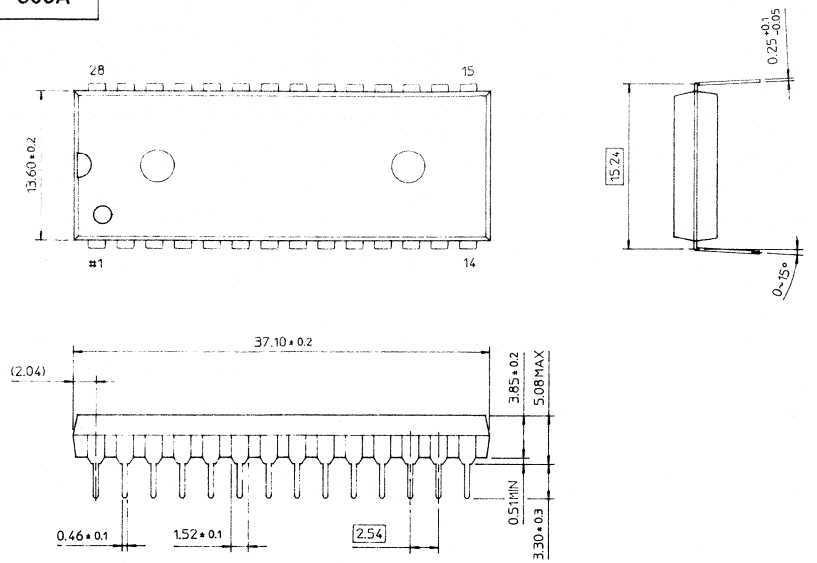

40-DIP-600A

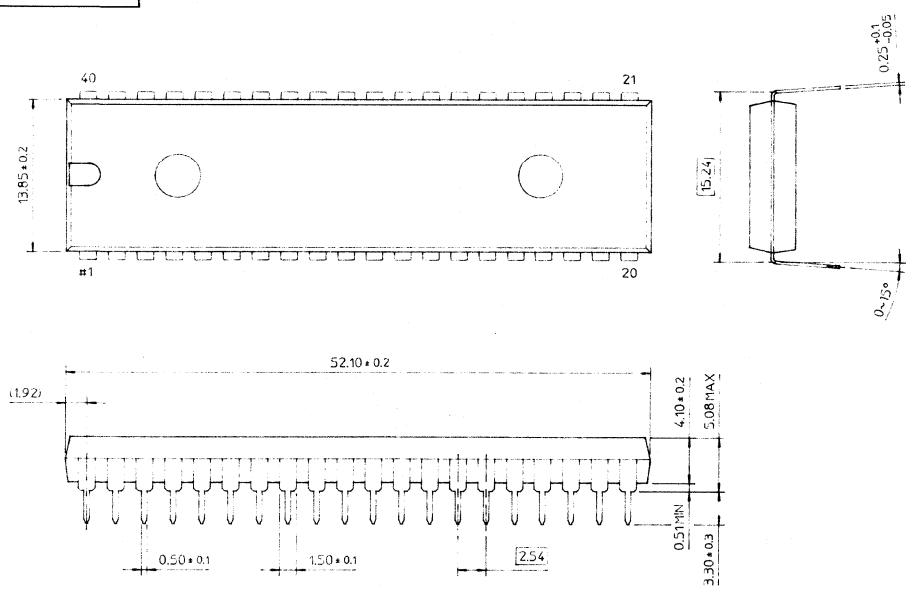

4

Dimensions in Milimeters

42-DIP-600A

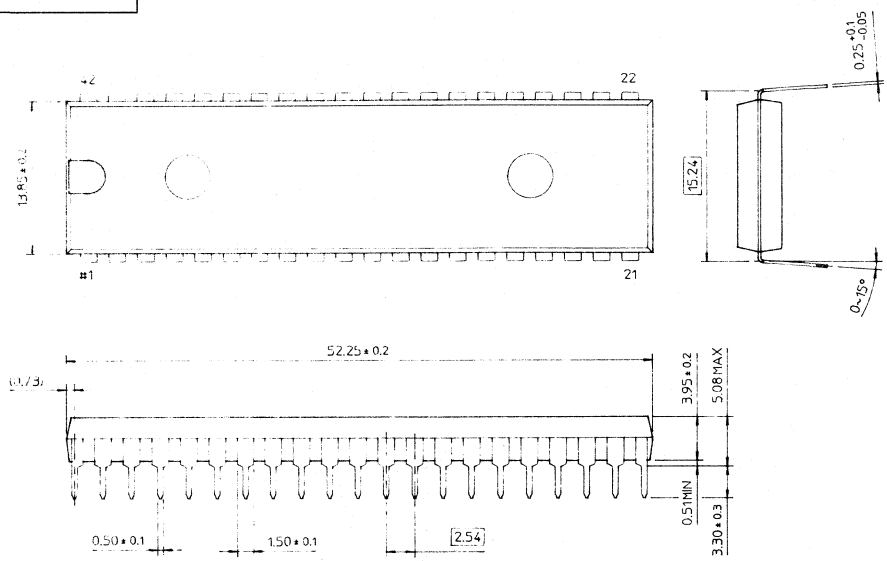

22-SDIP-300

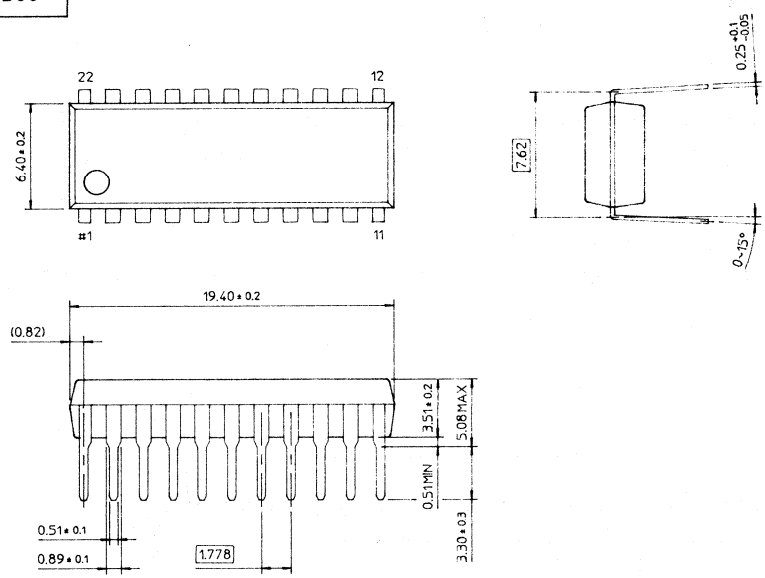

Dimensions in Milimeters

28-SDIP-400

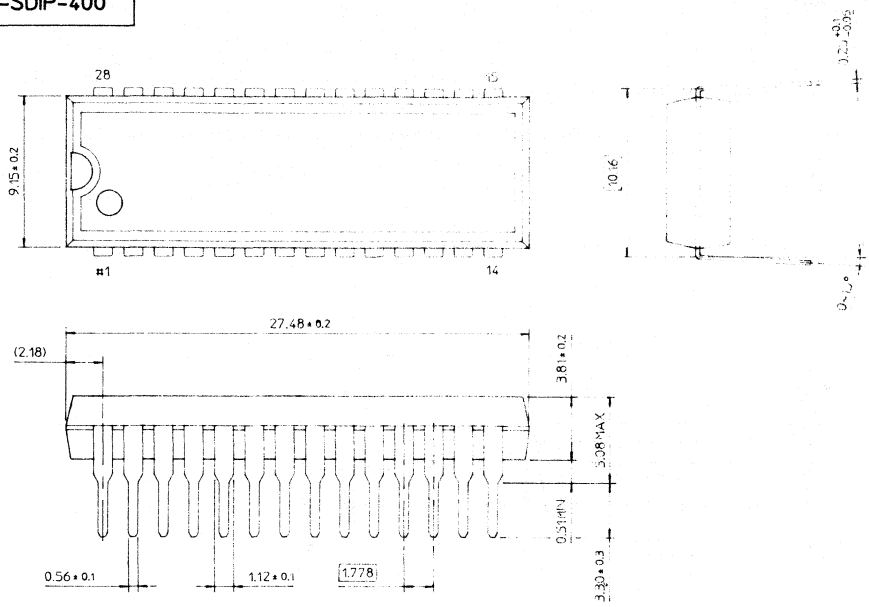

32-SDIP-400

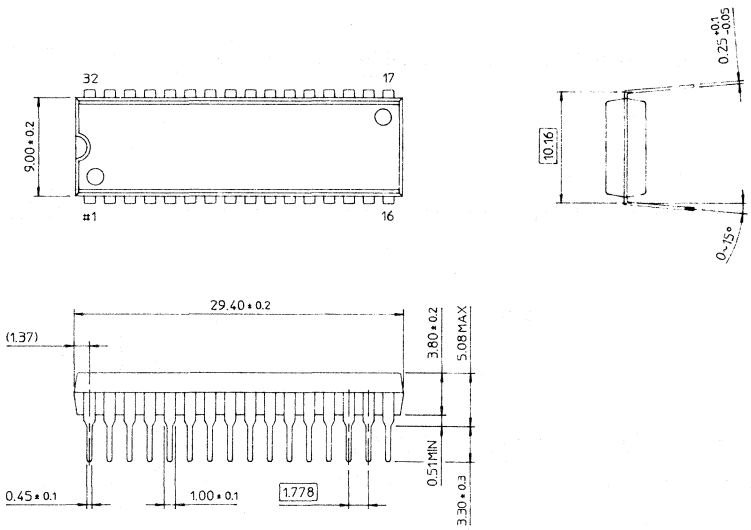

Dimensions in Milimeters

42-SDIP-600

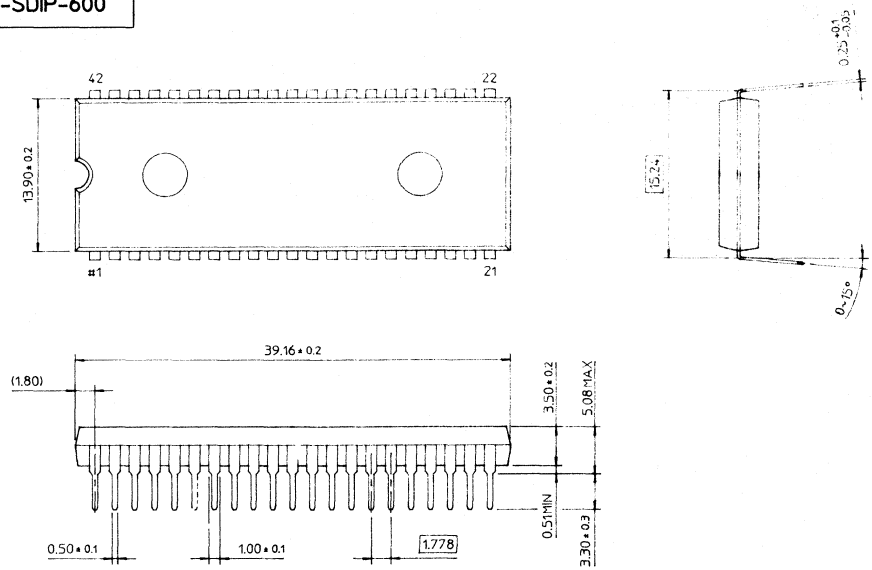

56-SDIP-600

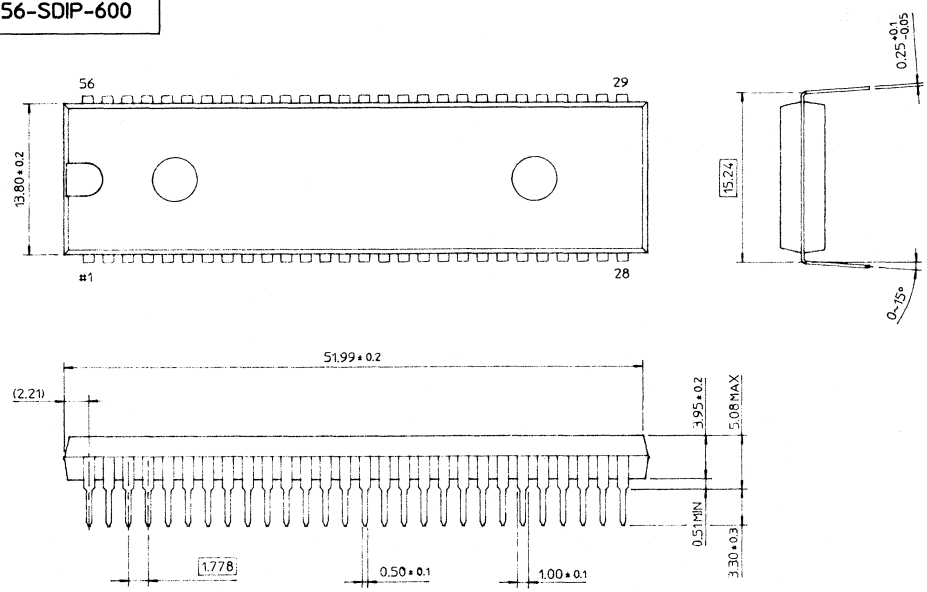

Dimensions in Milimeters

4-SIP

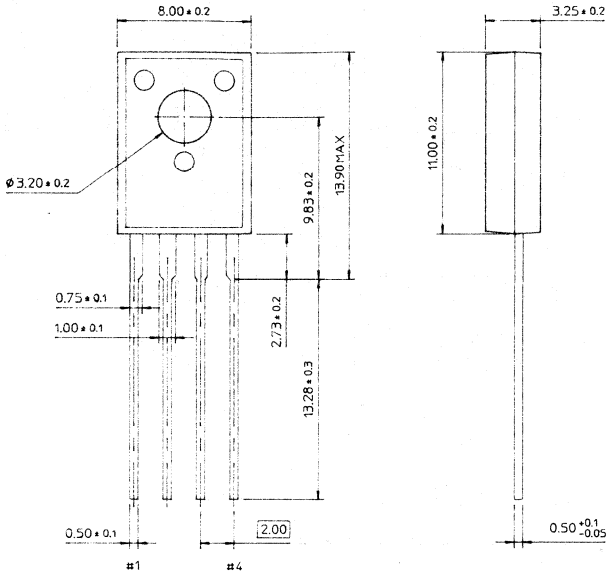

8-SIP

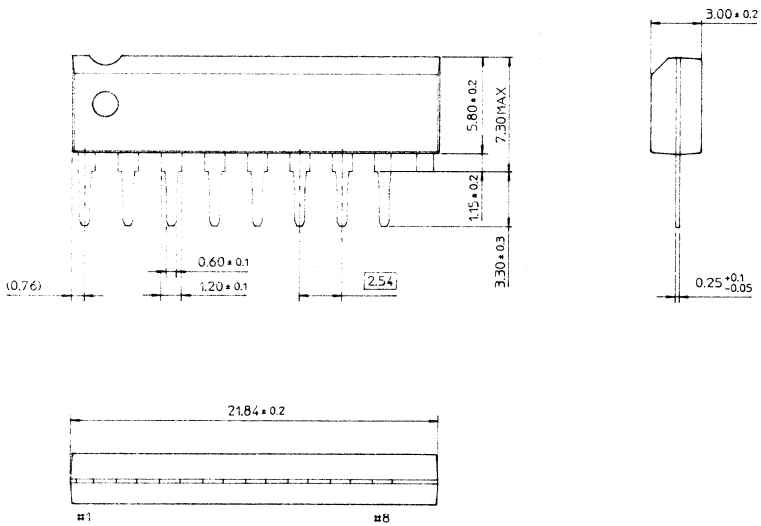

Dimensions in Milimeters

10-SIPH-A

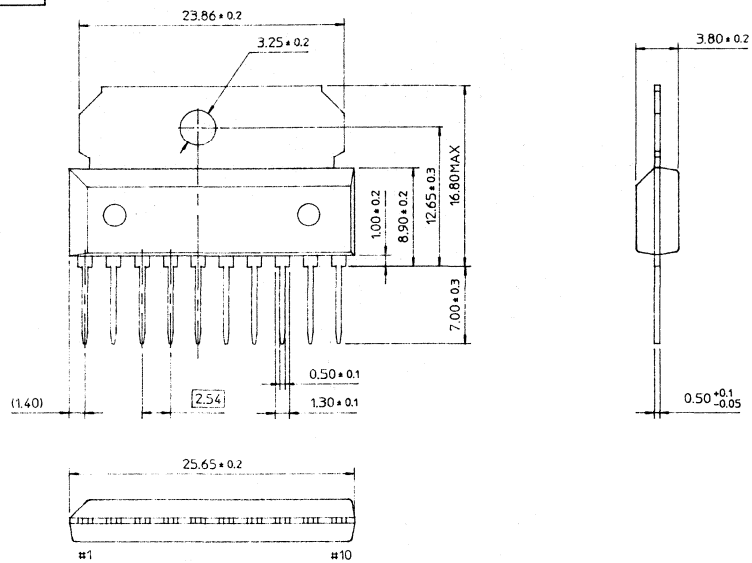

12-SIPH-A

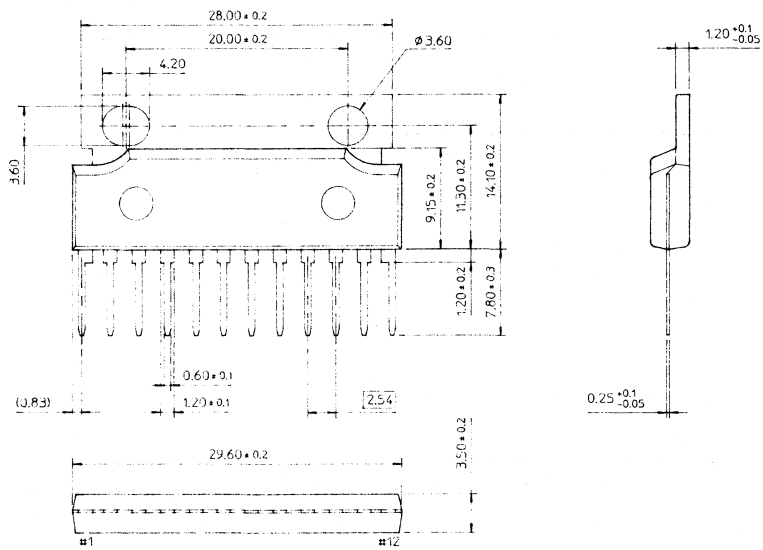

PACKAGE DIMENSIONS

Dimensions in Milimeters

12-ZIPH

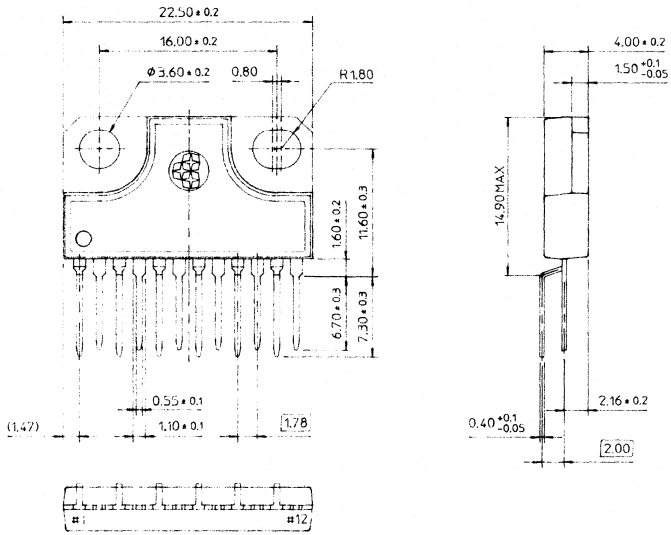

16-ZIP-350

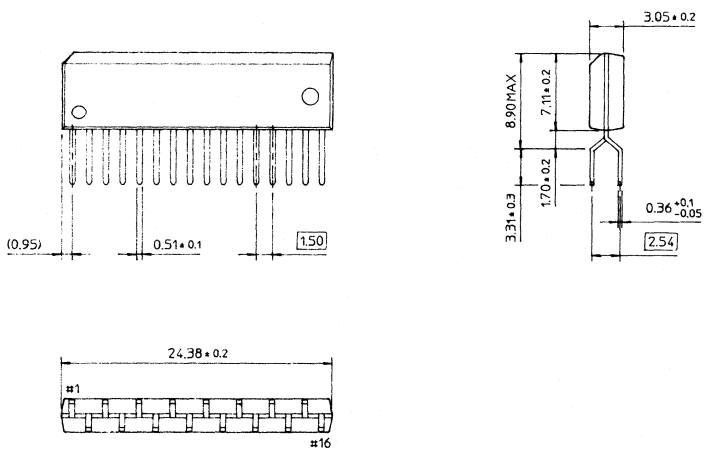

4

Dimensions in Milimeters

20(19)-ZIP-400

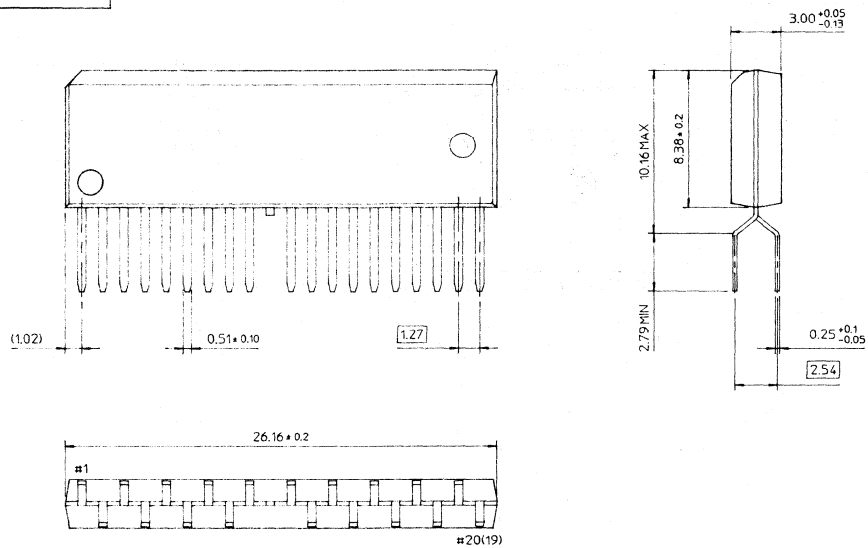

24-SZIP-275

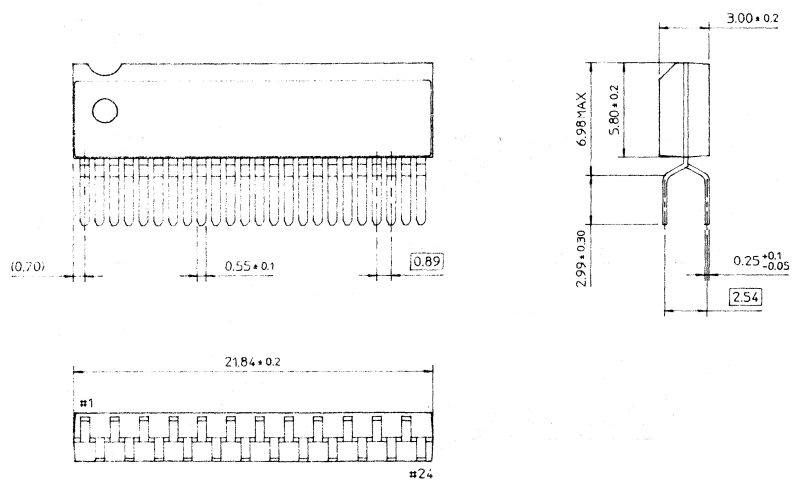

Dimensions in Milimeters

28-ZIP-400A

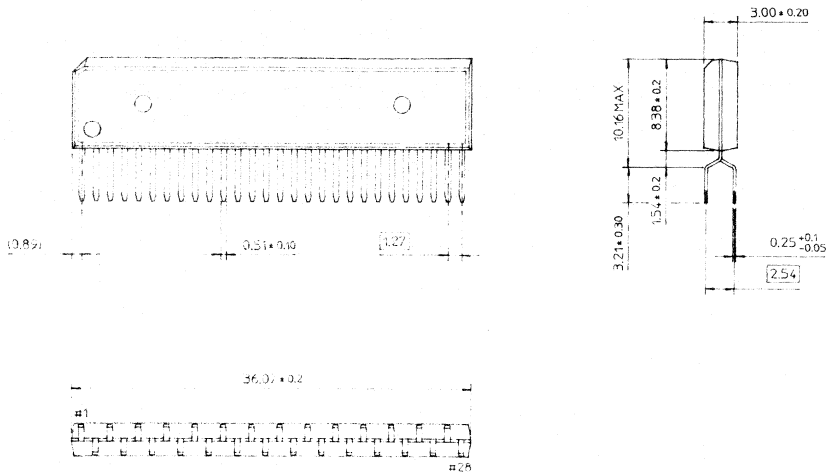

8-SOP-225

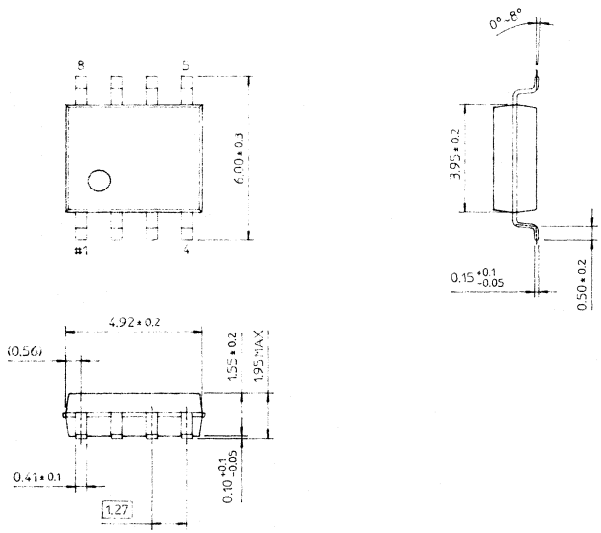

4

Dimensions in Milimeters

16-SOP-225

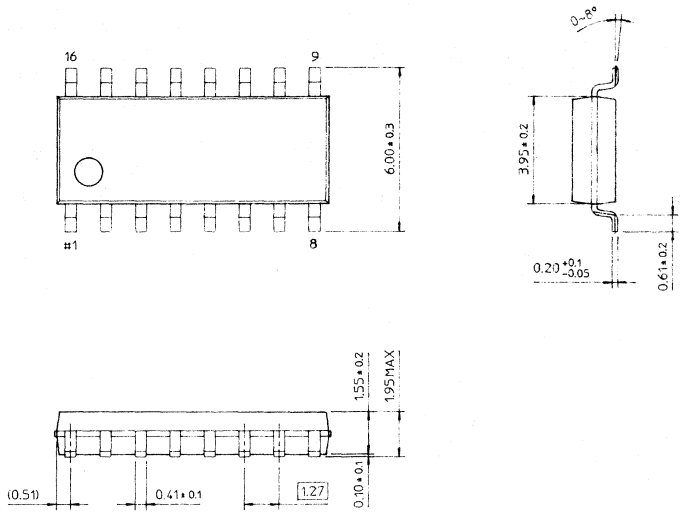

20-SOP-375

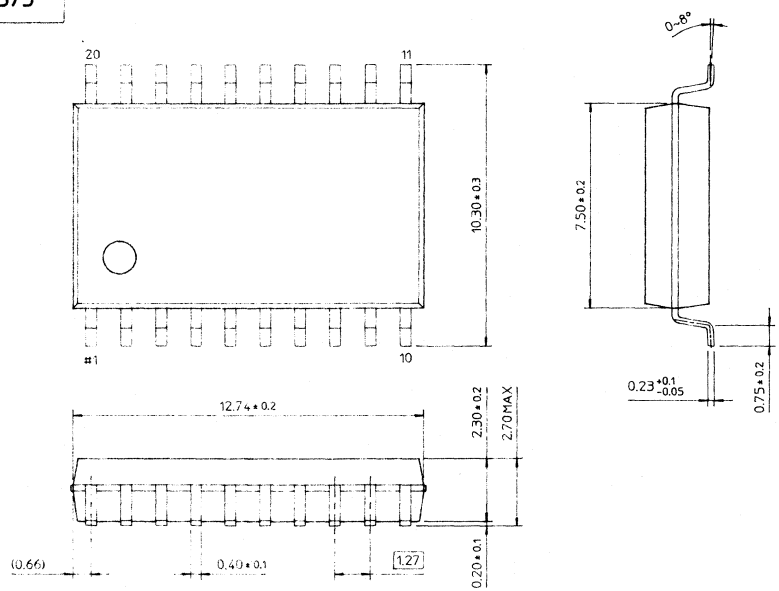

PACKAGE DIMENSIONS

Dimensions in Milimeters

24-SOP-375

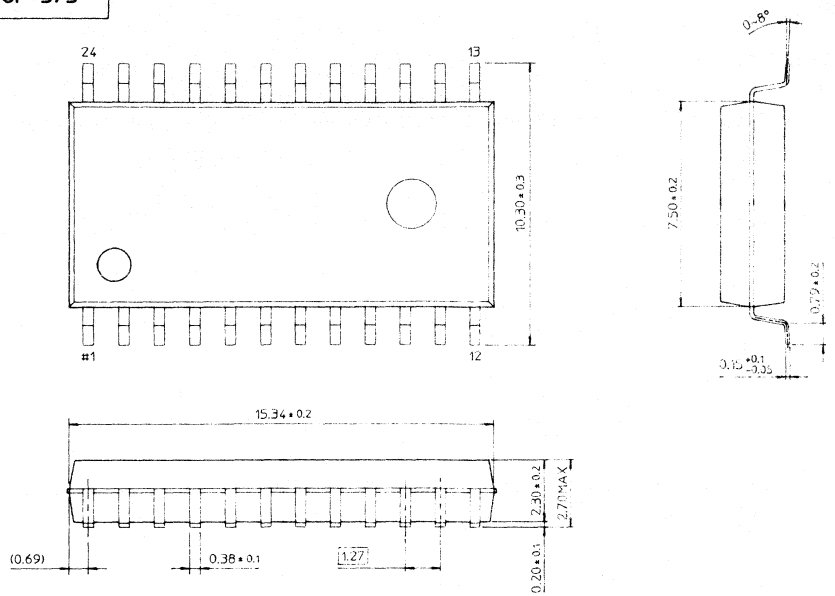

28-SOP-450

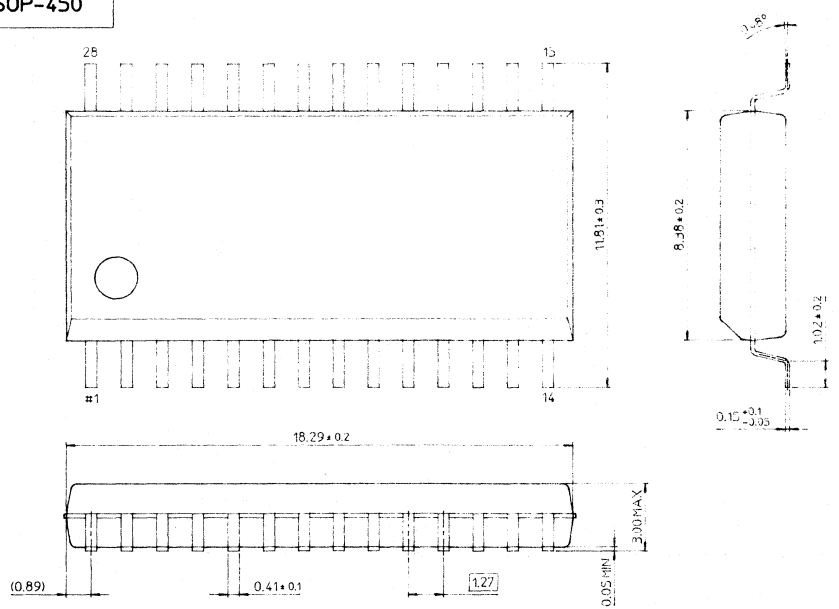

4

PACKAGE DIMENSIONS

Dimensions in Milimeters

32-SOP-450A

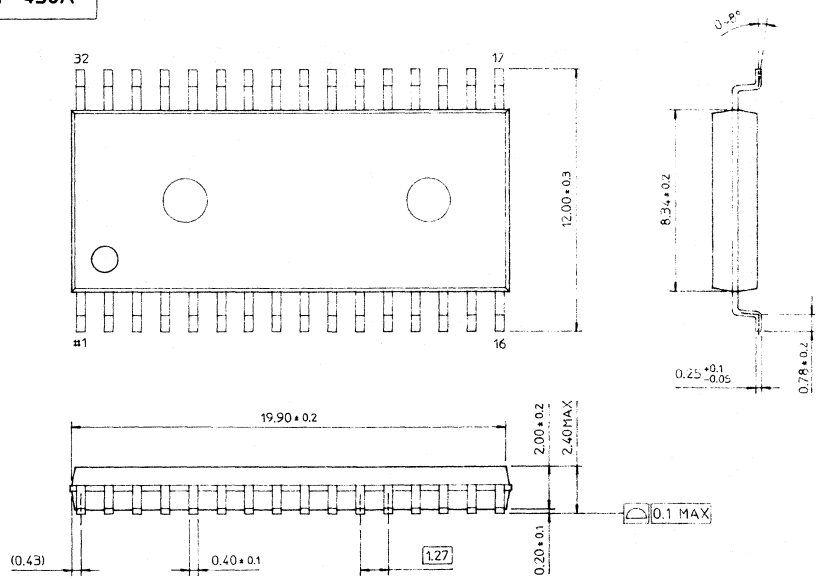

40-SOP-525

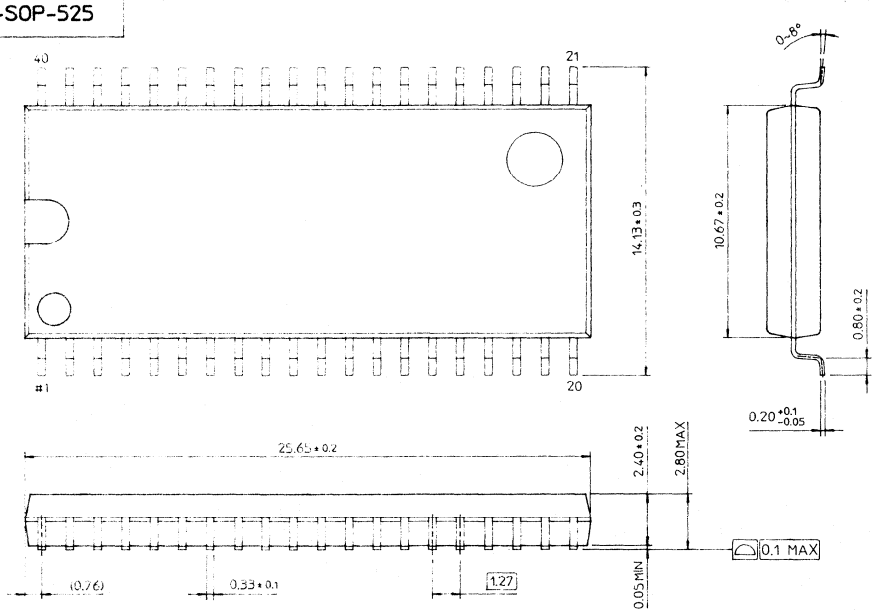

Dimensions in Millimeters

24(20)-TSOP1-0616F

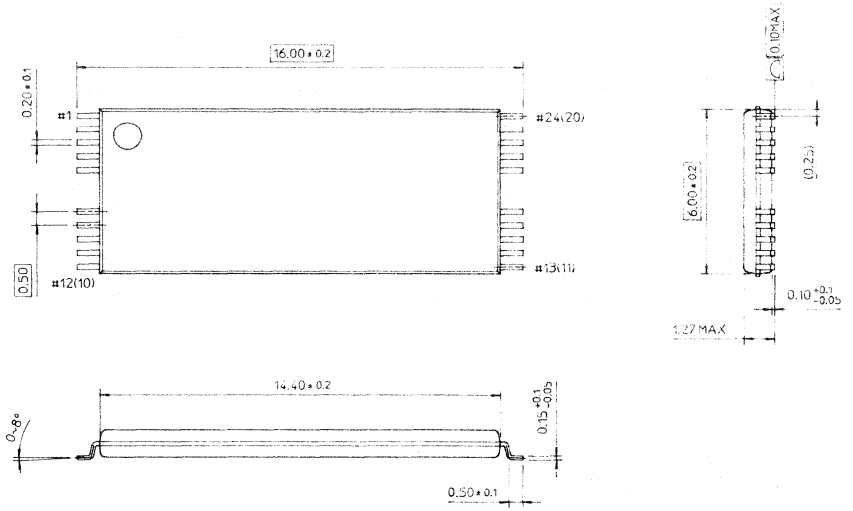

28-TSOP1-0813.4F

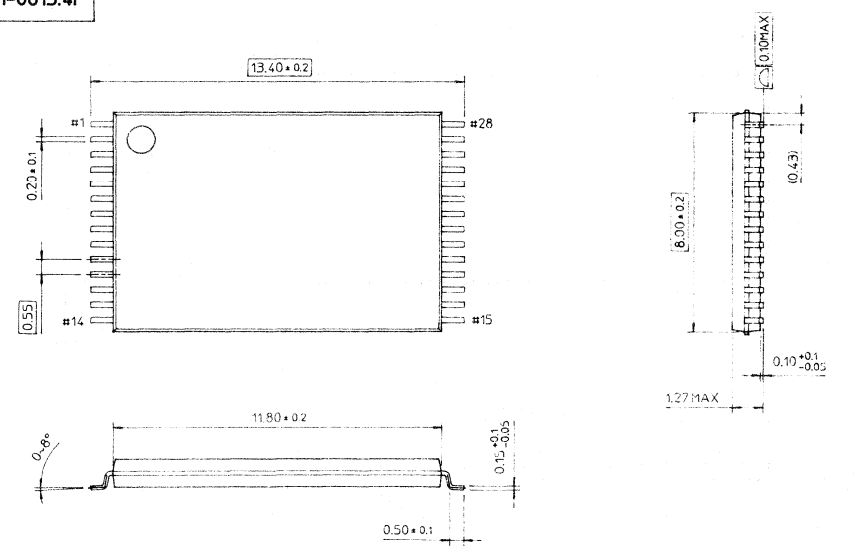

4

PACKAGE DIMENSIONS

Dimensions in Millimeters

32-TSOP1-0814F

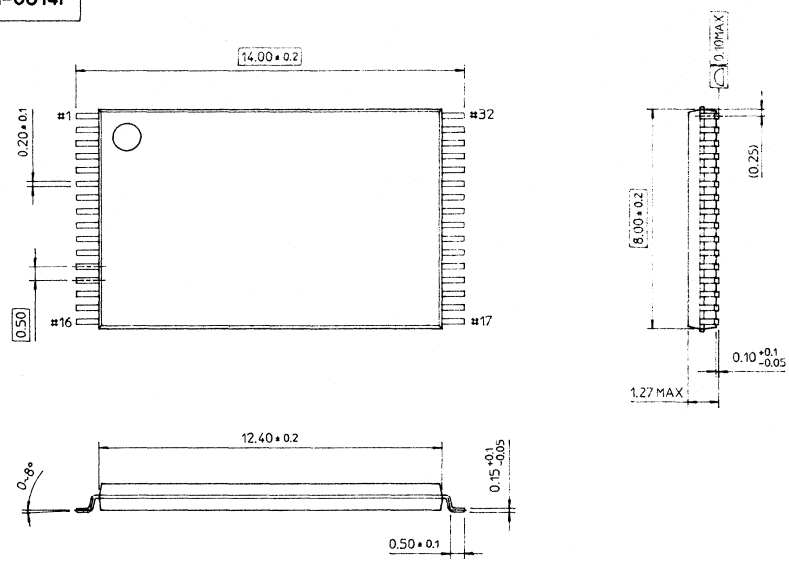

26(20)-TSOP2-300F

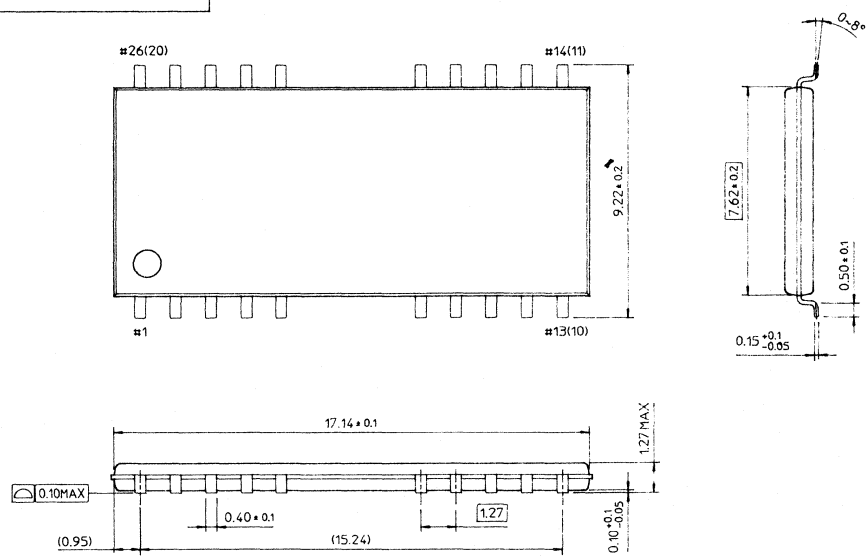

Dimensions in Milimeters

28-TSOP2-400F

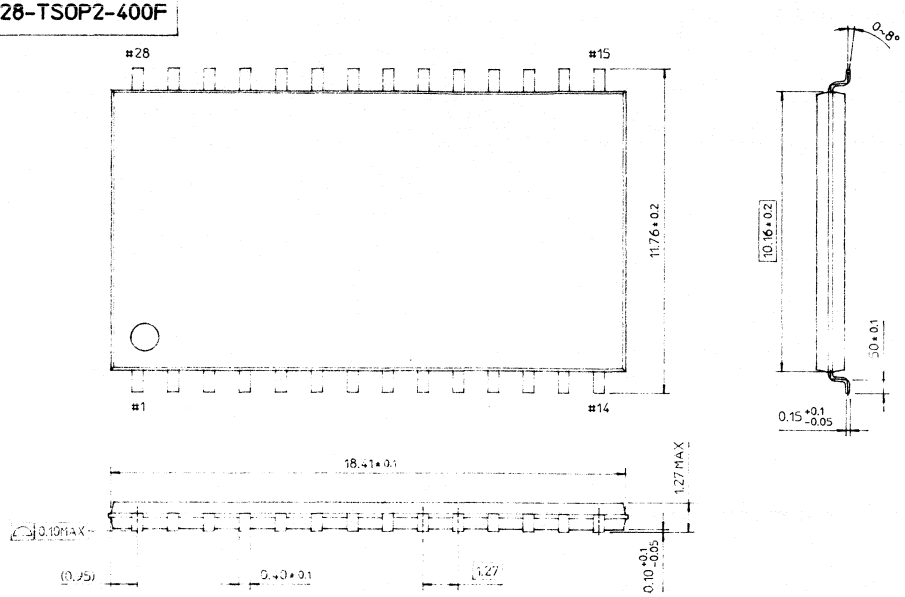

32-TSOP2-400F

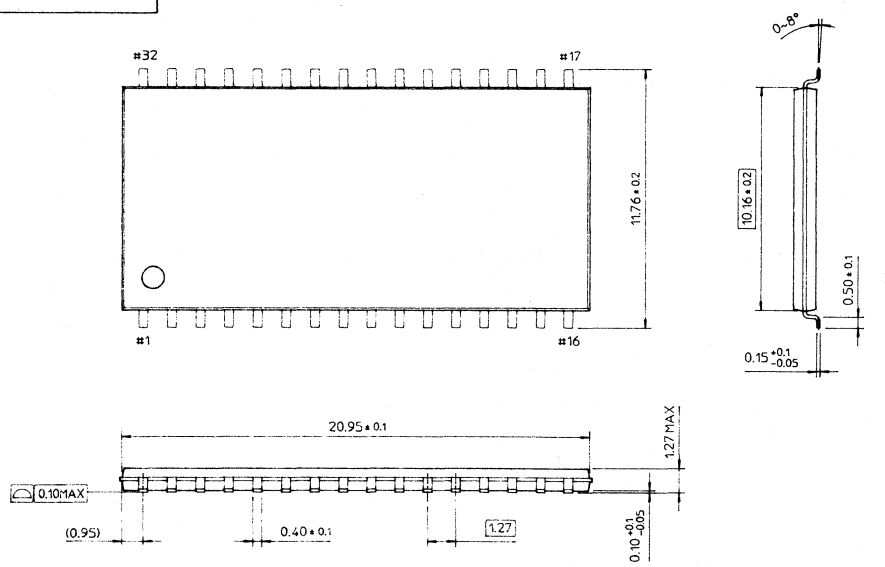

4

Dimensions in Milimeters

44(40)-TSOP2-400F

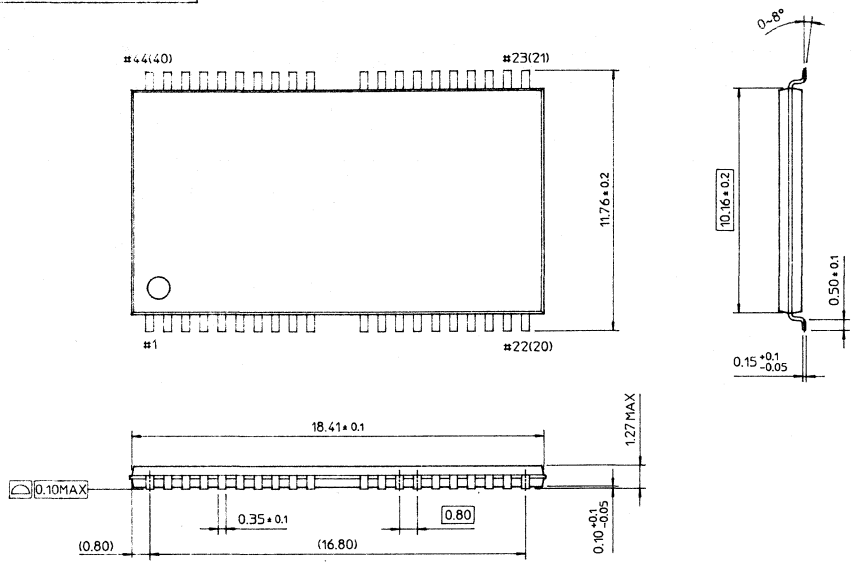

24-SOJ-300

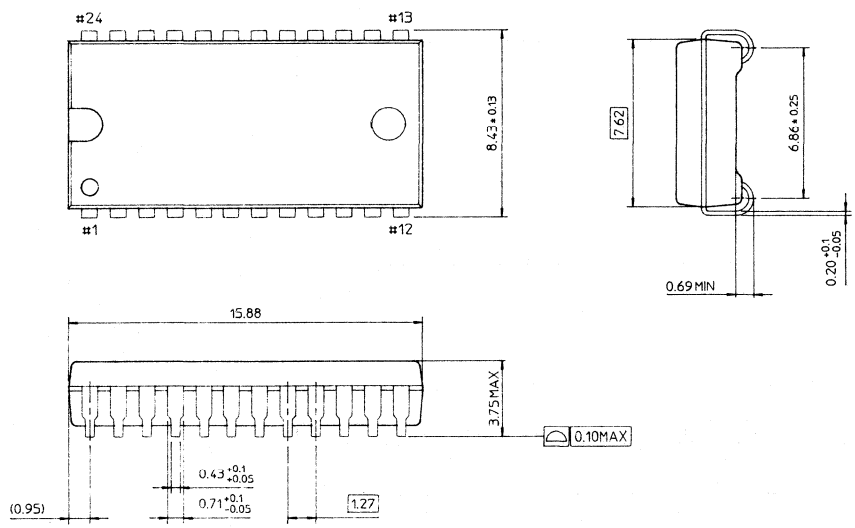

Dimensions in Milimeters

28-SOJ-400A

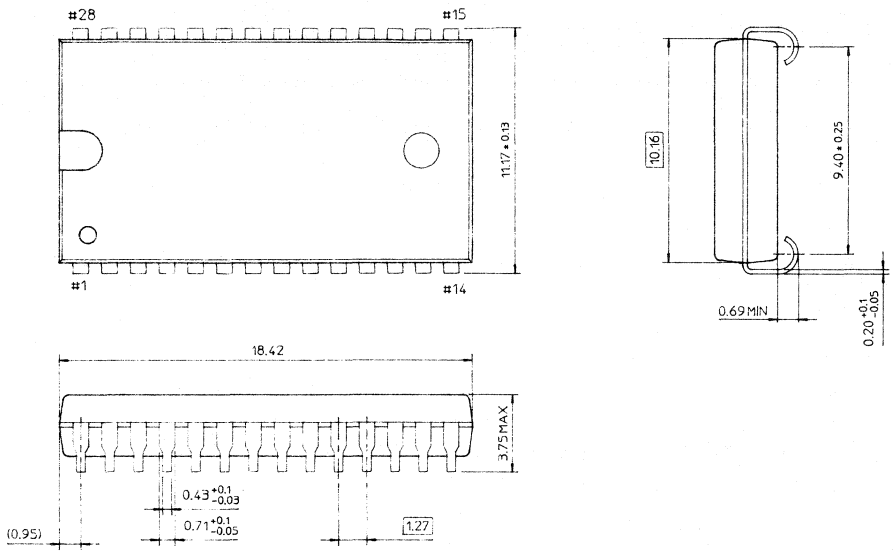

32-SOJ-400

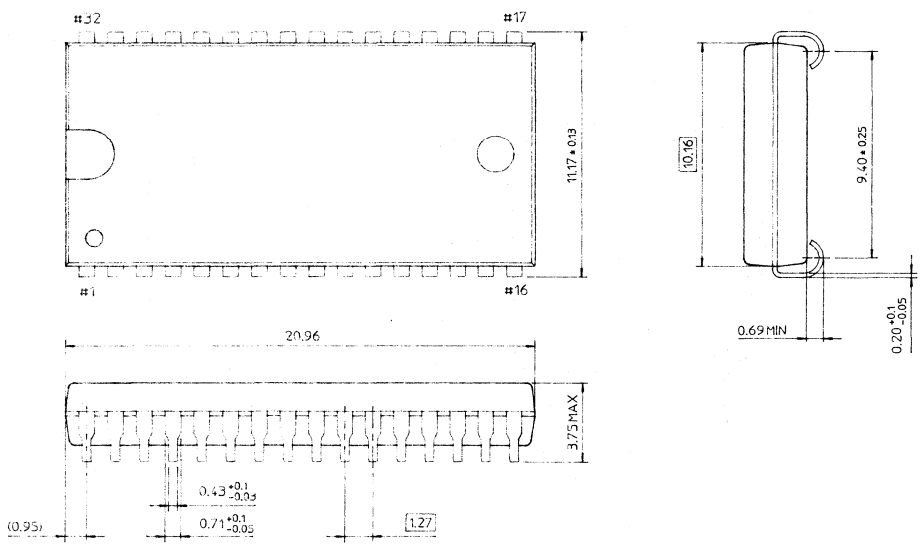

4

PACKAGE DIMENSIONS

Dimensions in Millimeters

42-SOJ-400

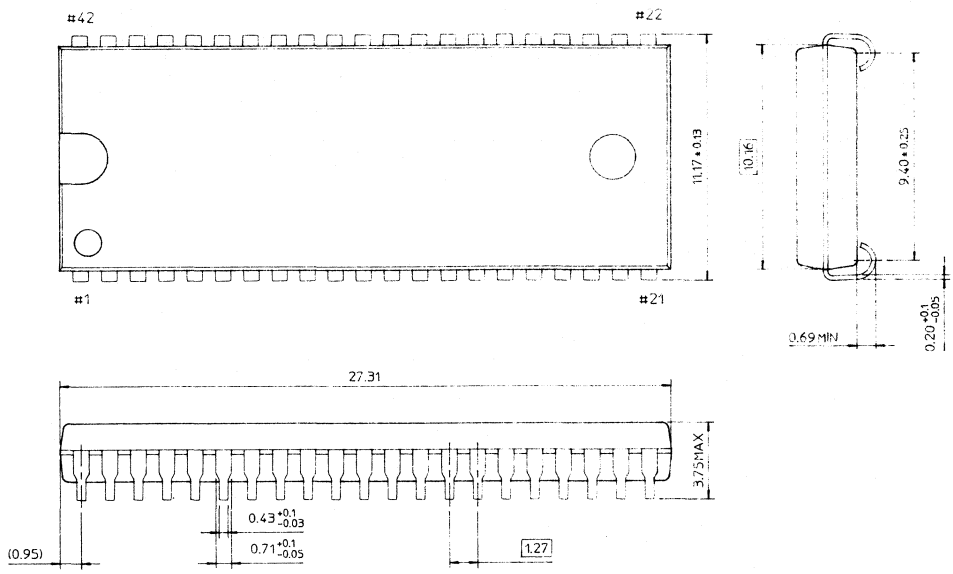

32-QFP-0707

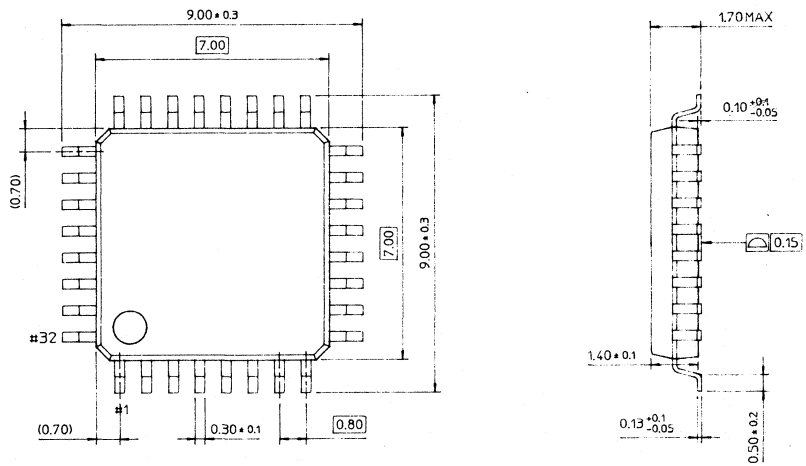

Dimensions in Milimeters

44-QFP-1010

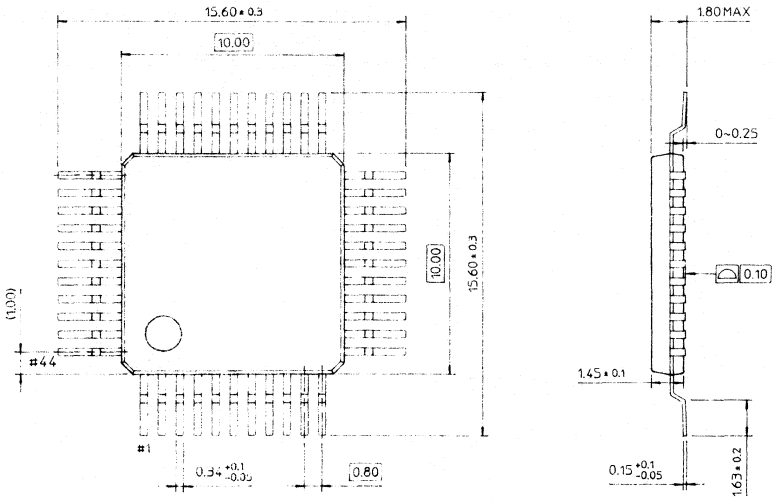

48-QFP-1010A

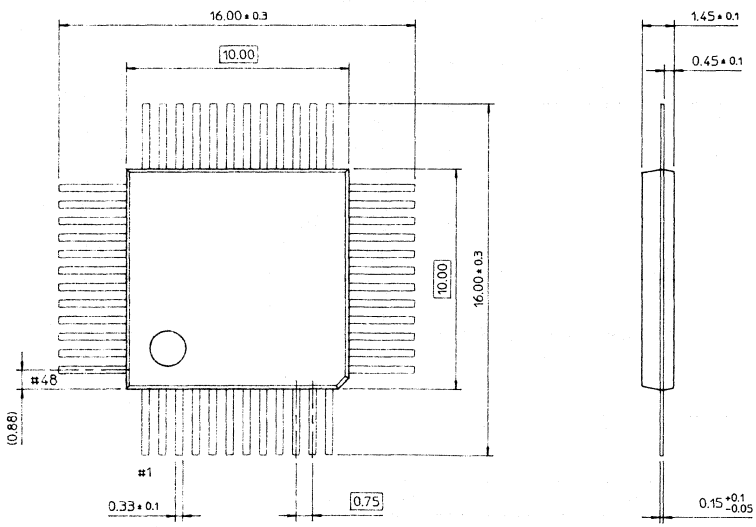

4

Dimensions in Milimeters

60-QFP-1414

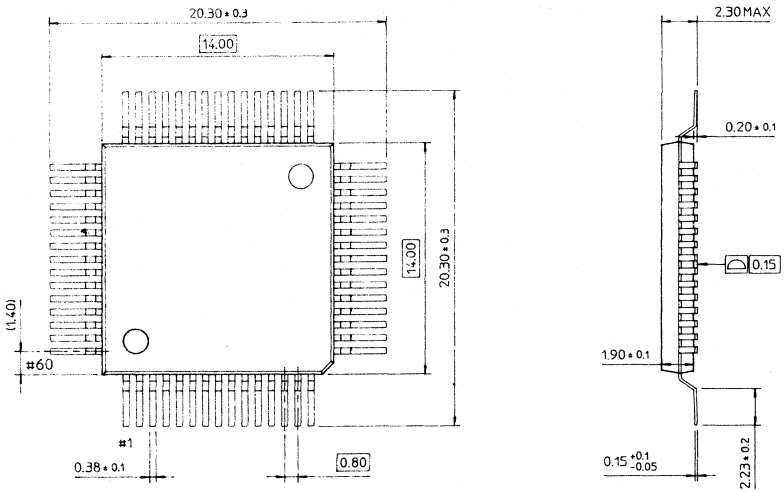

64-QFP-1420A

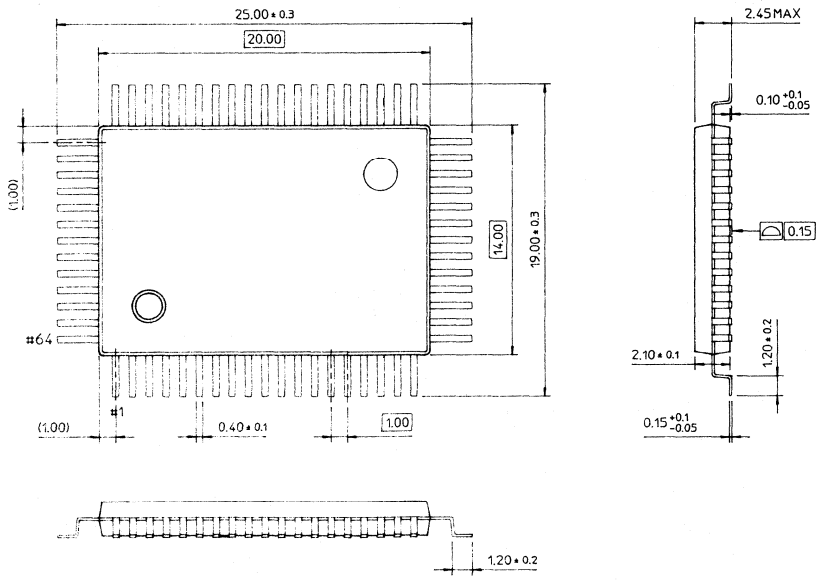

Dimensions in Milimeters

80-QFP-1420A

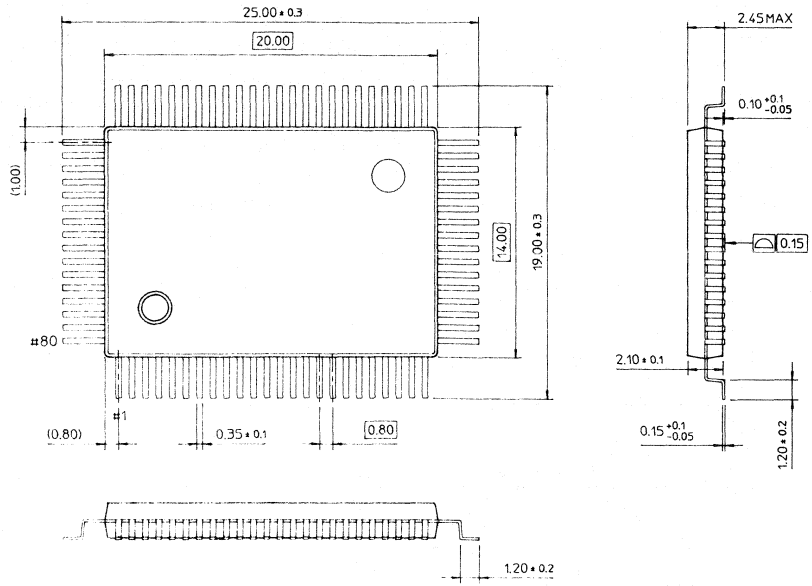

100-QFP-1420A

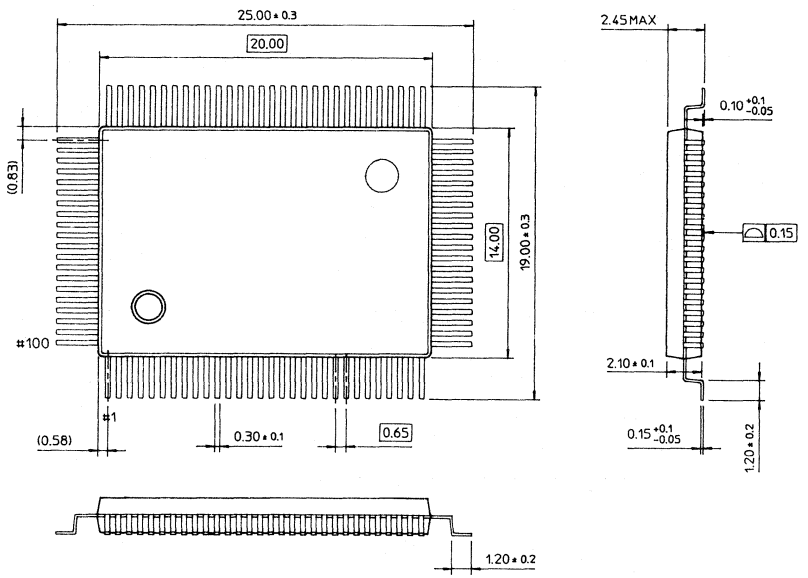

4

PACKAGE DIMENSIONS

Dimensions in Milimeters

18-PLCC-REC.

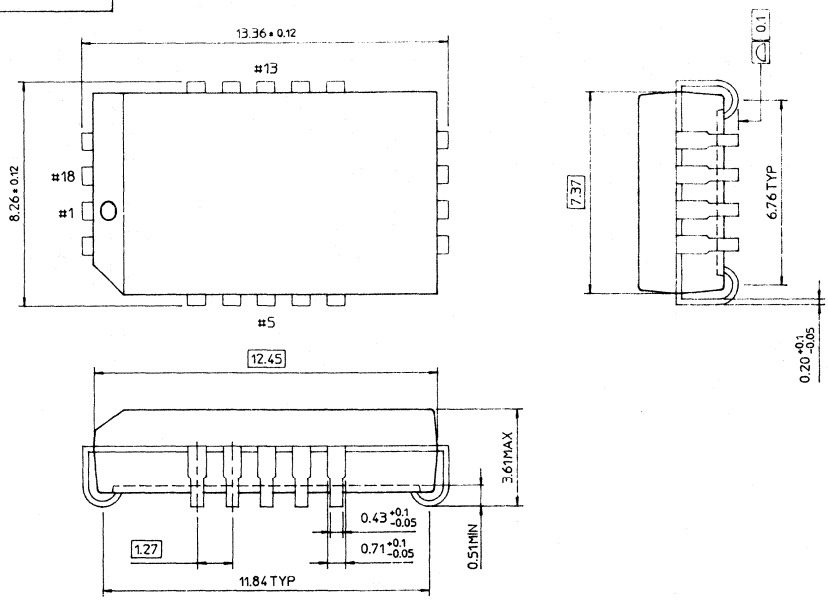

32-PLCC-REC.

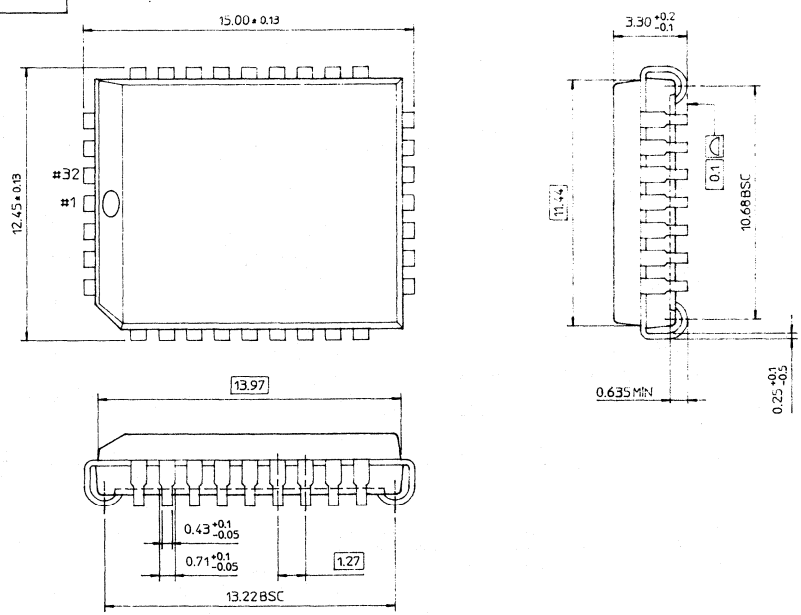

Dimensions in Milimeters

SOT-23

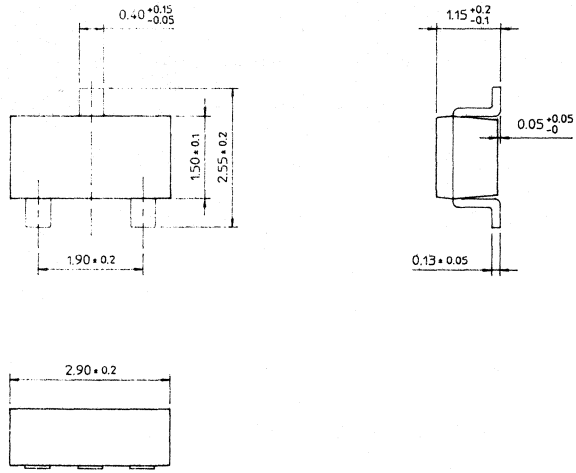

SOT-89

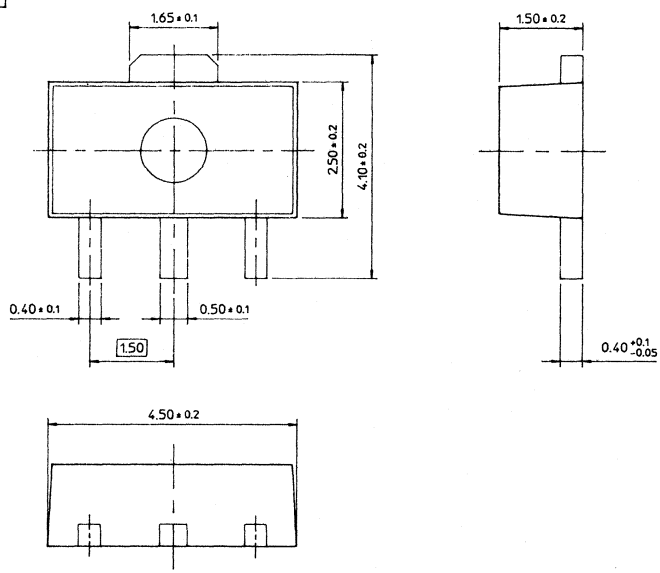

4

Dimensions in Milimeters

D-PAK

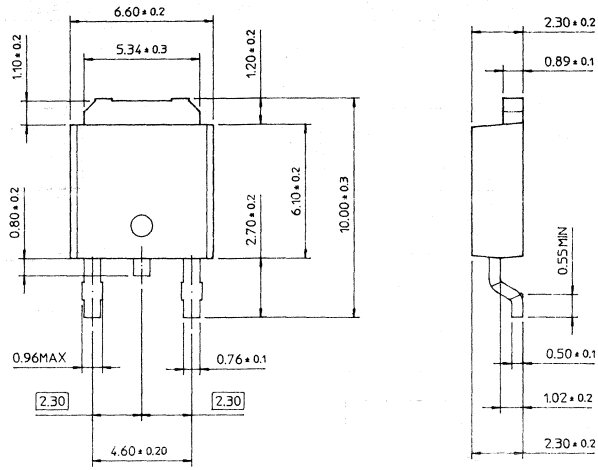

I-PAK

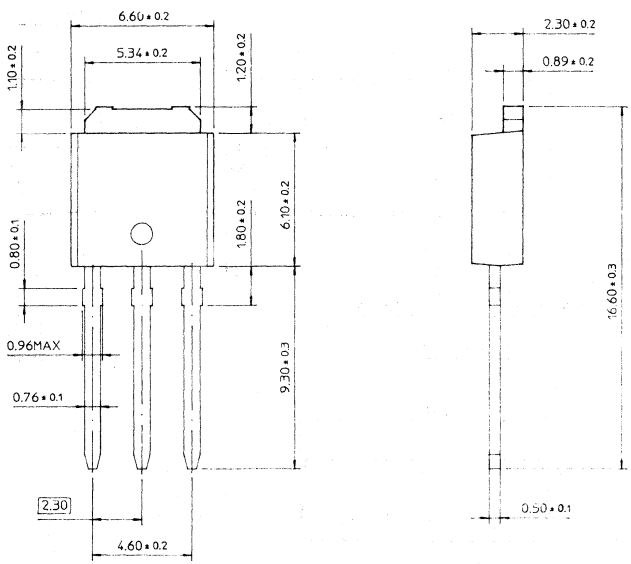

Dimensions in Milimeters

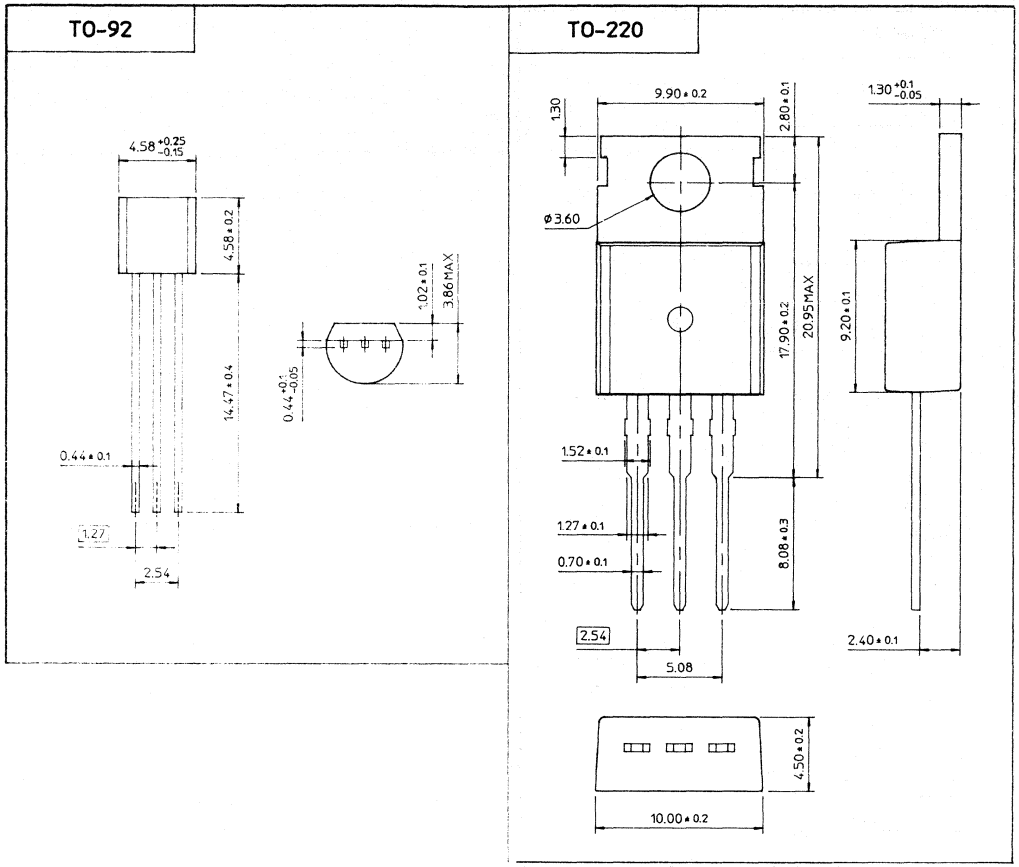

4

PACKAGE DIMENSIONS

Dimensions in Milimeters

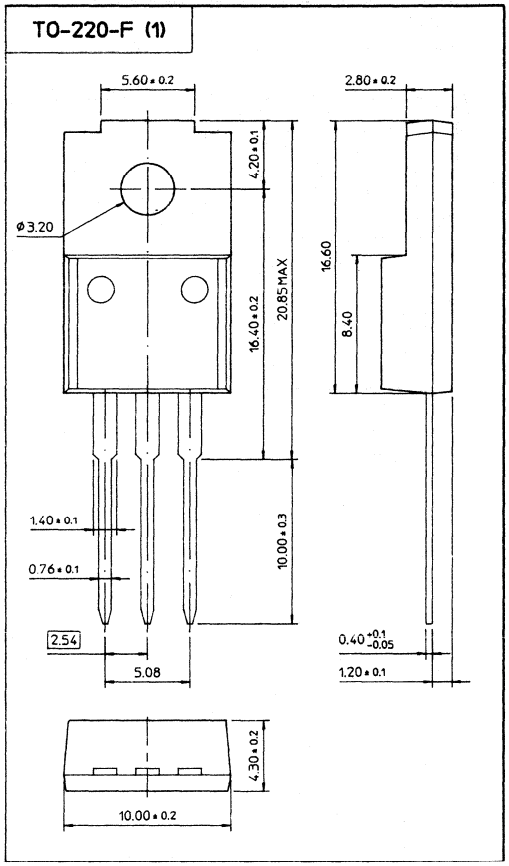

Dimensions in Milimeters

TO-220-5L (1)

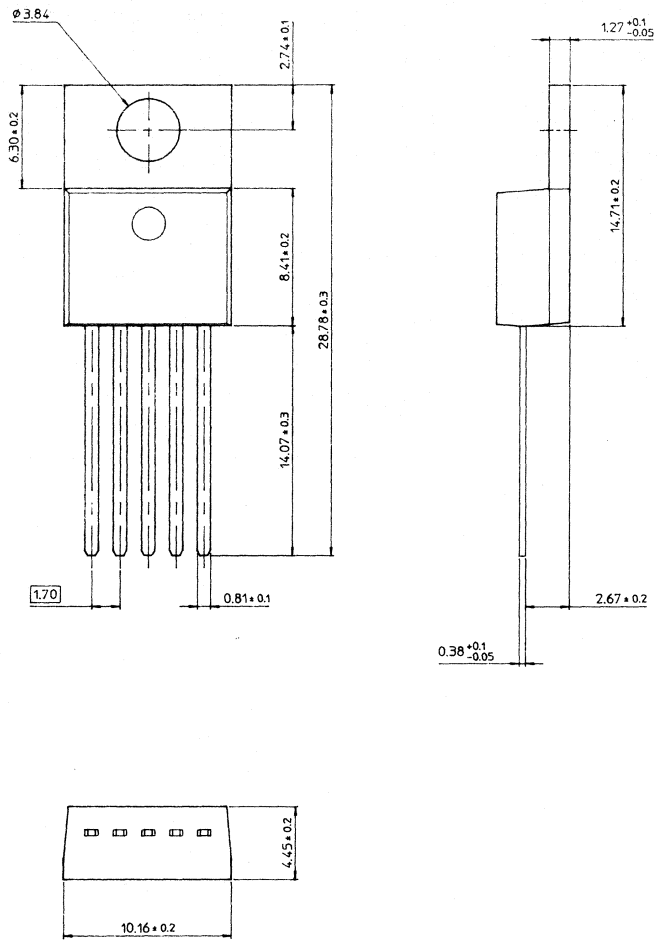

Dimensions in Milimeters

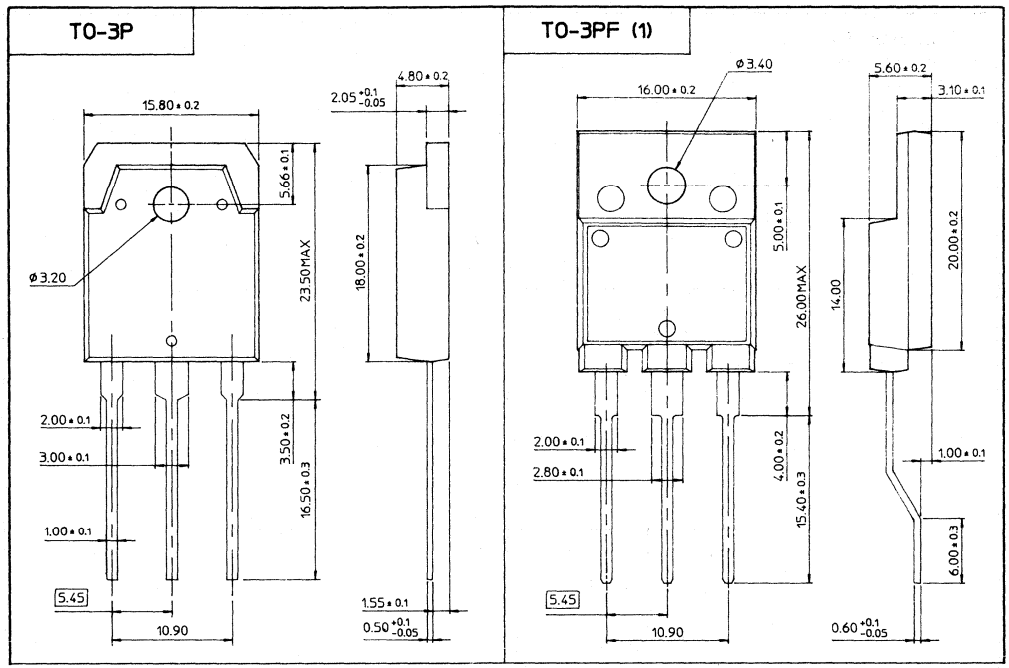

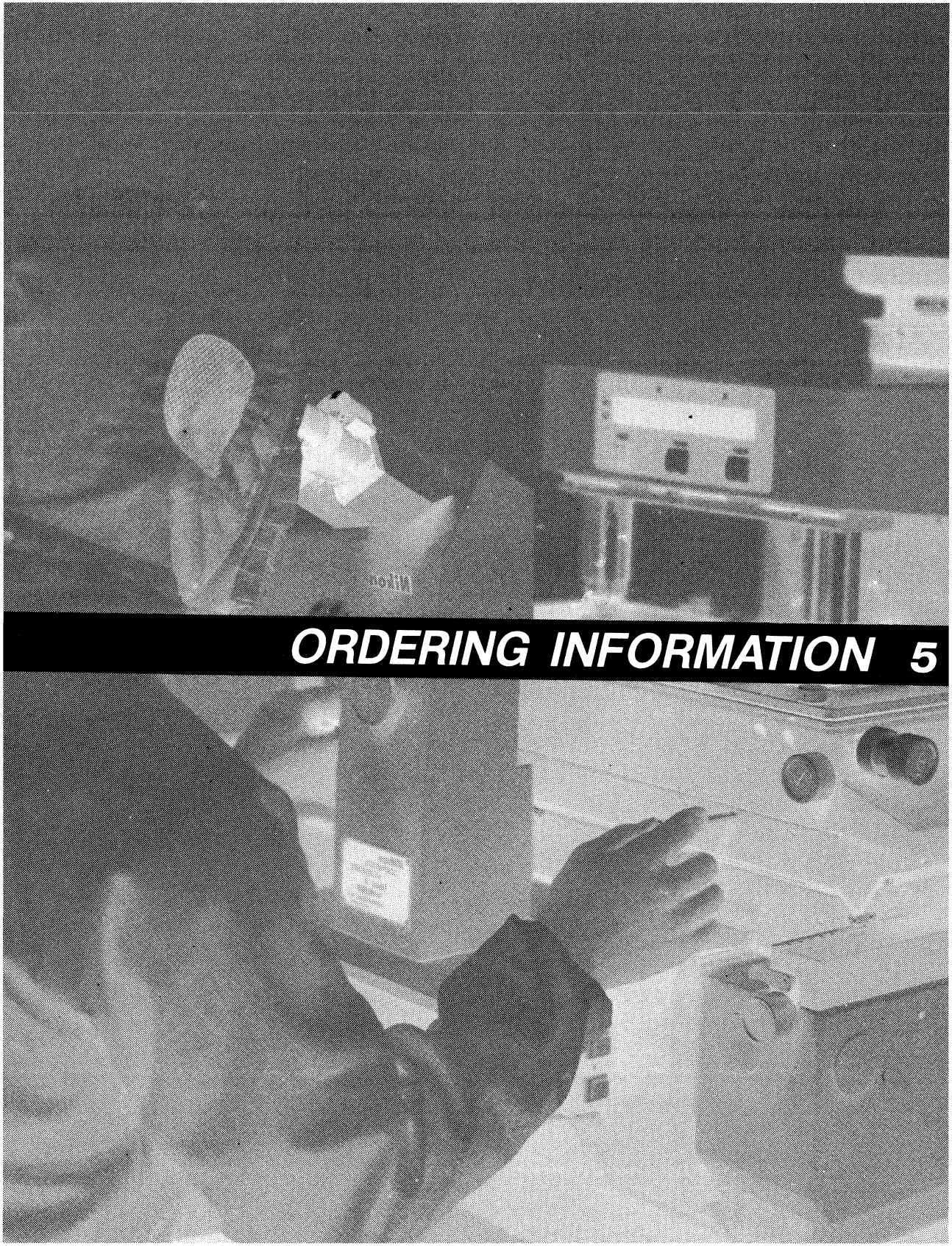

ORDERING INFORMATION 5

KSV 3100A C N/ +

- **+** — BURN-IN (OPTIONAL) (SEE BURN-IN PROGRAM)
- **N/** — PACKAGE TYPE (SEE EACH SPEC OF DEVICE)
- **C** — OPERATING TEMP IC'S ONLY
  BLANK: SEE INDIVIDUAL SPEC
  C : 0 - 70°C
  I : −40 - 85°C
  M : −55 - +125°C
- **3100A** — DEVICE NUMBER AND SUFFIX (OPTIONAL)
  A : IMPROVED VERSION
- **KSV** — DEVICE FAMILY (SEE BELOW)

DEVICE FAMILY

TRANSISTOR / FET

	DKS	DALINGTON TR
•	IRF	MOS POWER
•	IRFP	MOS POWER, TO-3P
•	KSA	PNP TR
	KSB	PNP TR
	KSC	NPN TR
	KSD	NPN TR
•	KST	TR, SOT-23
•	KST	TR, SOT-23
•	KST	TR, SOT-23
•	KSP	TR, TO-92
•	KSP	TR, TO-92
•	KSP	TR, TO-92
•	PN	TR, TO-92
	SSH	MOS POWER, TO-3P
	SSP	MOS POWER, TO-220
•	TIP	BIPOLAR TR
•	2N	TR

INTEGRATED CIRCUIT

KA	LINEAR IC
KG	GATE ARRAY
KS	CMOS IC
KT	TELECOM
SA	LINEAR ARRAY
SD	H.L AND LINEAR ARRAY
KSV	A/D-D/A CONVERTER
KAD	A/D CONVERTER
KDA	D/A CONVERTER
KC	CCD

• NOTE: Direct-Replacement parts for products initiated by other manufacturers

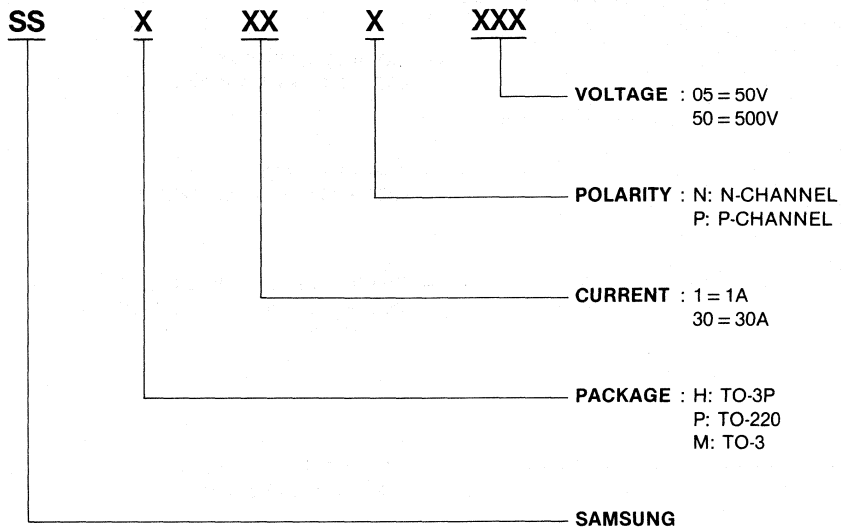

IRFP100 THRU 400 SERIES	: TO-3P	N-CH
IRFP9100 THRU 9200 SERIES	: TO-3P	P-CH
IRF500 THRU 800 SERIES	: TO-220	N-CH
IRF9500 THRU 9600 SERIES	: TO-220	P-CH

BIPOLAR TRANSISTOR

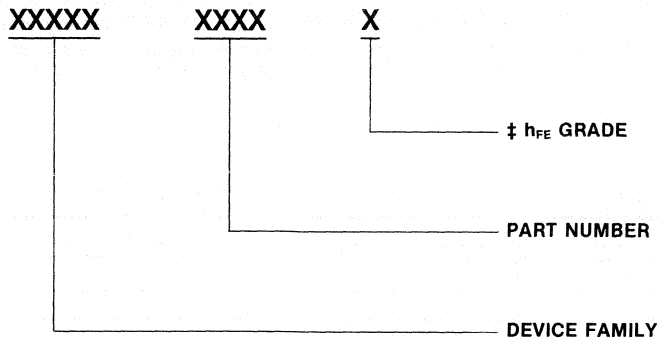

‡ h_{FE} GRADE SEE INDIVIDUAL SPEC.

SOT-23 ORDERING INFORMATION

TAPE AND REEL TYPE

Samsung's tape and reel fully meets EIA standard RS481 (8mm Type) all parts will be shiped in tape and reel forward (TF) tape and Reel Reverse (TR) tape and reel 13″ types (TI). TF, TR, TI are available according to the packing type added to the device number. Also Samsung's tape and reel's Quantity have 2 types. One type is 3K per reel another type is 10K per reel. And minimum order quantity is 3K PCS.

TF (Forward direction)

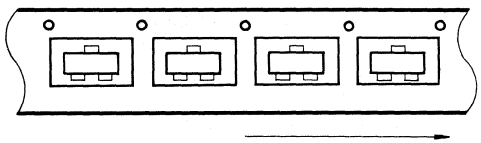

TR (Reverse direction)

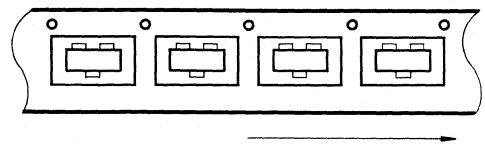

USER DIRECTION OF FEED

CARRIER TAPE REELS

Unit: mm

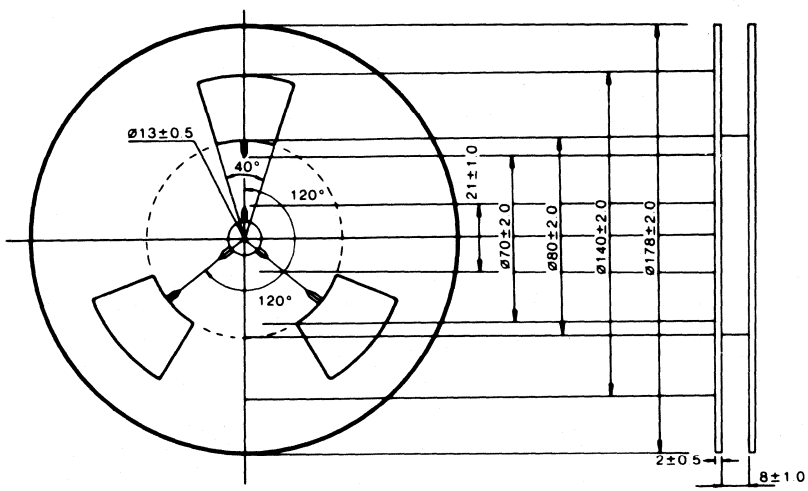

TO-92 ORDERING INFORMATION

AMMO PACK, BULK, TAPE & REEL FORWARD and TAPE & REEL REVERSE are available. The device will be shipped in 4 kind of packing description.

AMMO PACK

TO-92 TAPING SPECIFICATION

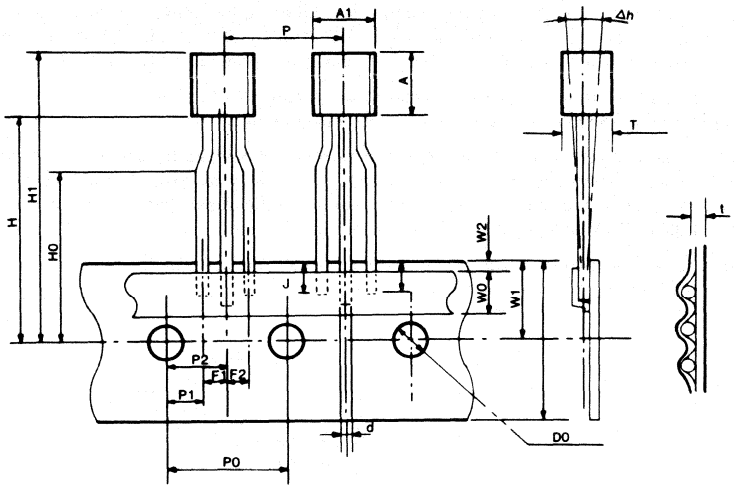

P	12.7±0.5	H_0	16±0.5
P_0	12.7±0.2	F	$5^{+0.8}_{-0.2}$
P_1	3.85±0.5	F_1-F_2	±0.3
P_2	6.35±0.5	D_0	4±0.2
W	$18^{+1.0}_{-0.5}$	t	0.65±0.2
W_0	6±0.5	Δh	C±1
W_1	9±0.5	d	0.46
W_2	Max. 0.5	T	3.56
H	Max. 21	L_1	Min. 2.5
H_1	Max. 27		

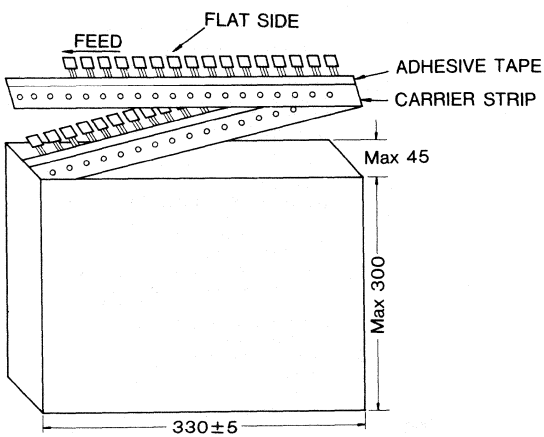

FLAT SIDE OF TRANSISTOR and ADHESIVE TAPE VISIBLE

1 AMMO PACK contains 2000 pcs Transistors.

SAMSUNG's AMMO PACK is equivalent to styles A,B,C,D of reel pack depending on which box-flat is opened and which end of the box the devices are fed from.

Minimum Order Quantity is 1 AMMO PACK.
Increment is 1 AMMO PACK

BULK TYPE

Minimum Order Quantity is 2000 pcs.
Increment is 1000pcs.

SAMSUNG'S A+ Program

The Samsung A+ Program has been designed to offer the customer an alternative to standard off-the-shelf plastic encapsulated CMOS circuits. The A+ Program will significantly reduce incoming inspection requirements as well as early device failures (infant mortality). These resuits are achieved by a tightened AQL inspection plan and a burn-in of each unit for 160+8, −0 hours at 125°C or equivalent conditions established from a time/temperature regression curve.

The AQL Plan. Acceptable Quality Levels (AQL) are a measure of the quality of outgoing CMOS circuits. These levels are established by the manufacturer to show the process percent defective being produced and to ensure that the customer is receiving material that meets his requirements. The Samsung A+ Program has tightened these AQL levels to a point at which incoming inspection by the customer is no longer a necessity. A+ product quality is monitored significantly more closely than standard product; those lots which fall the AQL level are 100% reworked before resubmission to the AQL gate.

The Reliability Plan. Reliability is the statistical probability that a product will give satisfactory performance for a specified period of time when used under specified conditions. A typical rate curve is shown below:

Reliability theory assumes that devices fail according to the above curve. When a group of devices is manufactured a small portion of the units will be inherently weaker than the average. These weak units will probably fail during the first few hours of operation—hence the term "infant mortality." If the units are burned-in however, thereby allowing the weak units to fail, there is a much lower probability that those finally put into system use will fail.

The SAMSUNG A+ Flow. In order to achieve an extremely high quality unit and reduce infant mortality failures the following flow has been established:

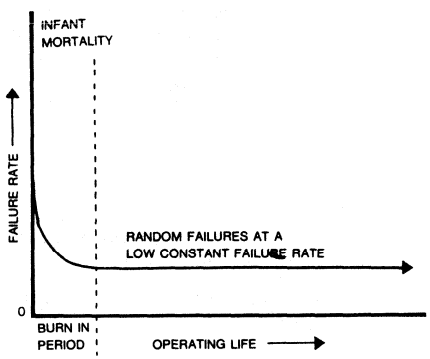

Process Flow

	DESCRIPTION
	WAFER FABRICATION CMOS PROCESS CV PLOTS OXIDE AND NITRIDE THICKNESS MEASUREMENTS OPTICAL INSPECTIONS SEM ANALYSIS
	ENCAPSULATION NITTO HC10 TYPE 2 EPOXY MOLDING COMPOUND ULTRA PURE FOR CMOS APPLICATIONS
	POST MOLD BAKE 6 HOURS AT 175 DEG. C. CURES PLASTIC STRESSES ALL WIRE BONDS AND DIE
	O/S FUNCTIONAL ELECTRICAL 100% TESTING OPENS/SHORTS AND INTERMITTENTS REMOVE
	HIGH TEMPERATURE BURN-IN 160 HOURS AT 125 DEG. C. OR EQUIVALENT CONDITIONS ESTABLISHED FROM A TIME/ TEMPERATURE REGRESSION CURVE. 0.96 eV
	FULL FUNCTIONAL AND PARAMETRIC ELECTRICAL TESTING 100% ELECTRICAL TESTING AC, DC 88 DEG, C.
	THERMAL SHOCK MONITOR −65 DEG. C. TO + 125 DEG. C. LIQUID TO LIQUID 5 CYCLES- SAMPLES SELECTED AT RANDOM
	TIGHT AQL SAMPLING PLAN ELECTRICAL−0.05% AQL AT 88 DEG. C. MECHANICAL−0.01% AQL CRITICAL & MAJOR
	SHIP UNITS

1. DRAM

KM 4 X X XXXXX X X X – XX

DRAM

ORGANIZATION

- 1: X1
- 4: X4
- 8: X8
- 9: X9
- 16: X16
- 18: X18

PROCESS & POWER

- C: CMOS, 5V
- V: CMOS, 3.3V

DENSITY

- 16000 (16M/4K, F.P)
- 16100 (16M/2K, F.P)
- 4000 (4M, 16M/4K, F.P)
- 4100 (16M/2K, F.P)
- 4001 (4M, N.B)
- 4002 (4M, S.C)
- 2000 (16M/4K, F.P)
- 2100 (16M/2K, F.P)
- 1000 (1M, 4M, 16M/4K, F.P)
- 1200 (16M/1K, F.P)
- 1001 (1M, 4M, N.B)
- 1002 (1M, 4M, S.C)
- 1010 (4M, F.P/WPB)
- 1012 (4M, S.C/WPB)
- 512 (4M, F.P)
- 256 (256K, 4M, F.P)
- 257 (256K, N.B)
- 258 (256K, 1M, S.C)
- 266 (1M, F.P/WPB)
- 268 (1M, S.C/WPB)
- 464 (256K, F.P)
- 466 (256K, S.C)

SPEED

- 6 : 60ns
- 7 : 70ns
- 8 : 80ns
- 10: 100ns

PACKAGE

- P: DIP
- J: SOJ
- Z: ZIP
- T: TSOP II (TR: Reverse)
- V: TSOP I (VR: Reverse)

POWER LIMITS

- BLANK: NORMAL
- L : LOW POWER
- SL : SUPER LOW POWER
- LL : SELF REFRESH

DIE REVISION

- BLANK: NONE
- A : FIRST REV.
- B : SECOND REV.
- C : THIRD REV.

5

2. DRAM MODULE

MODULE PART NUMBERING SYSTEM

KM M W WW XXXX Y Y Y Y Y Y —ZZ

MEMORY

MODULE

PIN/EDGE CONNECTOR

- •5: DRAM SIMM (EDGE CONNECTOR)
- •4: DRAM SIP (PINS)

ORGANIZATION

- •8 : X8 bits wide
- •9 : X9 bits wide
- •18 : X18 bits wide
- •32 : X32 bits wide
- •33 : X33 bits wide
- •36 : X36 bits wide
- •40 : X40 bits wide
- •144: X144 bits wide

DENSITY & MODE/FEATURE

16000: 16M F. Page, 4K refresh
16100: 16M F. Page, 2K refresh
8000: 8M F. Page, 4K refresh
8100: 8M F. Page, 2K refresh
4000: 4M F. Page, 1K/4K refresh
4001: 4M Nibble
4002: 4M S. Column
4020: 4M F. Page (Low Power)
4040: 4M F. Page (S. Low Power)
4100: 4M F. Page, 1K/2K refresh
1000: 1M F. Page
1001: 1M Nibble
1002: 1M S. Column
1010: 1M F. Page, L. Profile (.505")
1020: 1M F. Page (Low Power)
1040: 1M F. Page (S. Low Power)
1005: 1M Slugger Module
512: 512K Page
514: 512K S. Column
532: 512K Page (Low Power)
256: 256K Page
258: 256K S. Column
276: 256K Page (Low Power)

SPEED

- •5 : 50ns
- •6 : 60ns
- •7 : 70ns
- •8 : 80ns
- •10: 100ns

LEAD FINISH/SPEC CUSTOMER

—STD. MODULE
- •BLANK: SOLDER
- •G : GOLD

—CUSTOMER
- •D: DEC
- •H: HP
- •M: IBM
- •P: APPLE
- •Q: COMPAQ

× 32 & × 33 ONLY PCB

- •V: ×32 & ×33 ONLY

NUMBER OF COMPONENTS

- •BLANK: MORE THAN 7 CHIPS
- •N : LESS THAN 8 CHIPS
- •W : BYTE-WORD WIDE BASE

PACKAGE (PCB) REVISION

- •BLANK: NONE
- •1 : FIRST REV.
- •2: SECOND REV.

PACKAGE (COMPONENT) TYPE

- •BLANK: SOJ OR PLCC
- •*T : TSOP

DIE (COMPONENT) REVISION

- •BLANK: NONE
- •A : FIRST REV.
- •B : SECOND REV.
- •C : THIRD REV.

3. SRAM ORDERING INFORMATION

KM XX X X XXXX X X X X — XX X X

MEMORY COMPONENT

DEVICE TYPE

- •6 : SRAM (Asyn.)
- •65: Pseudo SRAM
- •7 : SRAM (ASSP)

ORGANIZATIONS

- •1: ×1 bit
- •4: ×4 bits
- •2 or 8: ×8 bits
- •9: ×9 bits
- •16: x16 bits

TECHNOLOGY

- •BLANK: CMOS
- •B : BiCMOS (TTL I/O)

DENSITY & OPTIONS

- •64 : 64K Slow
- •65 : 64K Fast
- •66 : 64K Fast (with OE)
- •256 : 256K Slow
- •257 : 256K Fast
- •258 : 256K Fast (with OE)
- •259 : 256K Fast (Sep. I/O, High-Z)
- •260 : 256K Fast (Sep. I/O, Low-Z)
- •512 : 512K Slow
- •513 : 512K Fast
- •1000: 1M Slow
- •1001: 1M Fast
- •1002: 1M Fast (Center Power)
- •1003: 1M Fast (Center Power, with OE)
- •1005: 1M Fast (Sep. I/O)
- •1006: 1M Fast (Synch. Sep. I/O)
- •4000: 4M Slow
- •4002: 4M Fast (Center Power)
- •8128: 128K x 8 (1M PSRAM)
- •8512: 512K x 8 (4M PSRAM)

OPERATING V_{CC}

- •BLANK: 5V
- •V : 3V

POWER LIMITS

- •BLANK: High Power
- •L : Low Power
- •L-L : Low Low Power

SPEEDS

SLOW	FAST
•5 : 55ns	•8 : 8ns
•7 : 70ns	•10: 10ns
•8 : 80 or 85ns	•12: 12ns
•10: 100ns	•15: 15ns
•12: 120ns	•20: 20ns
	•25: 25ns
	•35: 35ns
	•45: 45ns

OPERATING TEMP.

- •BLANK: Commercial
- •I : Industrial

PACKAGES

- •P: DIP
- •G: SOP
- •J : SOJ
- •T : TSOP (Standard)
- •R: TSOP (Reverse)

VERSION

- •BLANK→A→B

5

4. EEPROM

KM 28 C XXX X X — XX

- **Parallel EEPROM** — 28
- **CMOS Process** — C
- **Density** — XXX
- **Speed** — XX
- — Blank: Commercial
  — I : Industrial
- — Blank: DIP PKG
  — J : PLCC PKG

KM 93 C XX X X

- **Serial EEPROM** — 93
- **CMOS Process** — C
- **Density** — XX
- — Blank: Commercial
  — I : Industrial
- — Blank: DIP PKG
  — G : SOIC PKG

5. MASK ROM

KM 23 C XX XXXX XX — XX

- **DEVICE TYPE** — 23
  - •23: MASK ROM
- **PROCESS** — C
  - •C: CMOS
- **DENSITY** — XX
- **ORGANIZATION & VERSION** — XXXX
- **PACKAGE** — XX
  - •BLANK: DIP
  - •G : SOIC
  - •FP : QFP
- **SPEED** — XX
  - •10: 100ns
  - •12: 120ns
  - •15: 150ns
  - •20: 200ns

6. FIFO

KM 75CXXA X X — XX

SAMSUNG MEMORY COMPONENT

PART NUMBER

PACKAGE

- P: Plastic DIP, 600 mil
- J : Plastic PLCC
- N: Plastic DIP, 300 mil

SPEED

- 12: 12ns
- 15: 15ns
- 20: 20ns
- 25: 25ns
- 35: 35ns
- 50: 50ns
- 80: 80ns

TEMPERATURE

- BLANK: 0 ~ 70°C
- I : −40 ~ +85°C

7. VRAM

KM 42 X X XXX X X — XX

VRAM

ORGANIZATION
- 4: X4
- 8: X8
- 16: X16

PROCESS & POWER
- C:CMOS, 5V

DENSITY
- 64K
- 128K
- 256K

SPEED
- 6: 60ns
- 8: 80ns
- 10: 100ns

PACKAGE
- P: DIP
- J: SOJ
- Z: ZIP
- T: TSOP II

DIE VERSION
- A:SECONO-UER

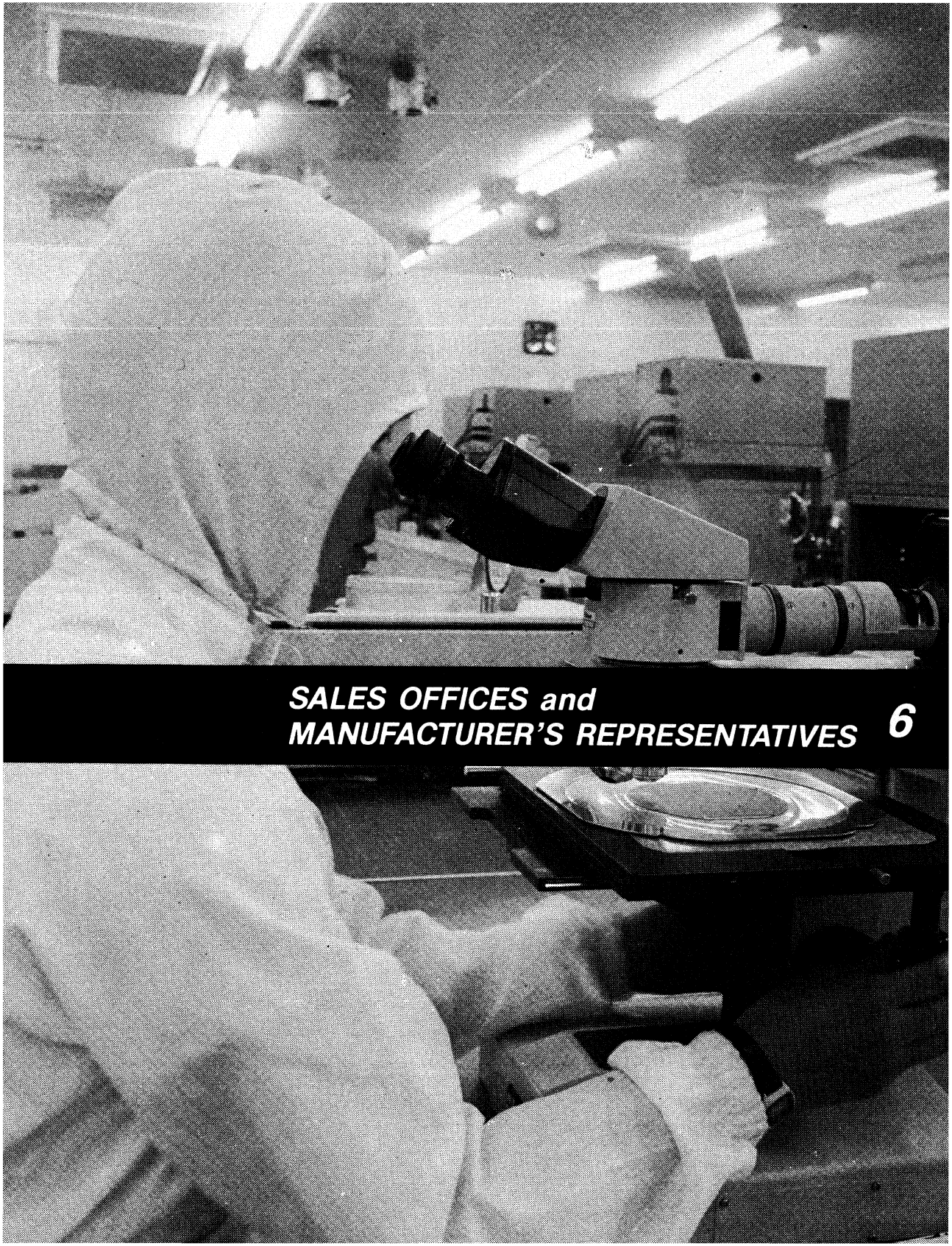

SALES OFFICES and MANUFACTURER'S REPRESENTATIVES 6

SAMSUNG SEMICONDUCTOR SALES OFFICES-U.S.A.

Northwest
3655 North First Street
San Jose, CA 95135
(408) 954-7000
FAX: (408) 954-7883

North Central
901 Warrenville Road
Suite 120
Lisle, IL 60532-1359
(708) 852-2011
FAX: (708) 852-3096

North East
20 Mall Road
Suite 410
Burlington, MA 01803
(617) 273-4888
FAX: (617) 273-9363

Southwest
16253 Laguna Canyon Road
Suite 100
Irvine, CA 92718
(714) 753-7530
FAX: (714) 753-7544

South Central
15851 Dallas Parkway
Suite 840
Dallas, TX 75248-3307
(214) 770-7970
FAX: (214) 770-7971

Southeast
802 Greenvalley Road
Suite 204
Greensboro, NC 27408
(919) 370-1600
FAX: (919) 370-1633

SAMSUNG SEMICONDUCTOR REPRESENTATIVES

ALABAMA
SOUTHERN COMPONENT SALES TEL: (205) 533-6500 FAX: (205) 533-6578
307 Clinton Ave. East
Suite 413
Huntsville, AL 35801

ARIZONA
O'DONNELL ASSOCIATES TEL: (602) 944-9542 FAX: (602) 861-2615
2432 W. Peoria Ave.
Suite 1026
Phoenix, AZ 85029

CALIFORNIA
BESTRONICS TEL: (619) 693-1111 FAX: (619) 693-1963
9683 Tierro Grande Street
Suite #102
San Diego, CA 92126
I-SQUARED TEL: (408) 988-3400 FAX: (408) 988-2079
3350 Scott Blvd.
Building 10
Santa Clara, CA 95054
WESTAR REP COMPANY TEL: (714) 832-3325 FAX: (714) 832-7894
2472 Chambers Road
Suite 100
Tustin, CA 92680
WESTAR REP COMPANY TEL: (310) 539-2156 FAX: (310) 539-2564
25202 Crenshaw Blvd.
Suite 217
Torrance, CA 90505
WESTAR REP COMPANY TEL: (818) 880-0594 FAX: (818) 880-5013
26500 Agoura Rd.
Suite 204
Calabasas, CA 91302

CANADA
INTELATECH, INC. TEL: (403) 230-3190 FAX: (403) 230-3183
218 Third Ave., NE
Calgary, Alberta T2E 0H2
INTELATECH, INC. TEL: (416) 629-0082 FAX: (416) 629-1795
1115 Crestlawn Drive
Suite 1
Mississauga, Ontario L4W1A7
INTELATECH, INC. TEL: (613) 596-1876 FAX: (613) 596-2442
6 Bentworth Cresent
Nepean, Ontario K2G 3X2

COLORADO
FRONT RANGE MARKETING TEL: (303) 443-4780 FAX: (303) 447-0371
3100 Arapahoe Road
Suite 404
Boulder, CO 80303

CONNECTICUT
PHOENIX SALES TEL: (203) 496-7709 FAX: (203) 496-0912
248 Main Street
Torrington,CT 06790

FLORIDA
B/B TECH SALES TEL: (305) 477-0341 FAX: (305) 477-0343
3900 N.W. 79th Avenue
Suite 636
Miami, FL 33166
DYNE-A-MARK TEL: (407) 831-2822 FAX: (407) 834-4524
101 Sunnytown Rd.
Suite 110
Casselberry, FL 32707
DYNE-A-MARK TEL: (305) 771-6508 FAX: (305) 772-0114
1001 NW 62nd Street
Suite 300N
Fort Lauderdale, FL 33309
DYNE-A-MARK TEL: (407) 725-7470 FAX: (407) 984-2718
742 Penguin Ave., NE
Palm Bay, FL 32905

GEORGIA
SOUTH ATLANTIC COMPONENT SALES
3300 Holcomb Bridge Road TEL: (404) 447-6154
Suite 210 FAX: (404) 447-6714
Norcross, GA 30092

ILLINOIS
DAVIX INTERNATIONAL LTD.
1655 N. Arlington Heights Rd. TEL: (708) 259-5300
Suite 302 East FAX: (708) 259-5428
Arlington Heights, IL 60004

INDIANA
GEN II MARKETING, INC. TEL: (317) 848-3083 FAX: (317) 848-1264
3003 E. 96th Street
Suite 102
Indianapolis, IN 46240

6

INDIANA (Continued)

GEN II MARKETING, INC TEL: (219) 436-4485
4803 Oak Mast Trail FAX: (219) 436-4485
Ft. Wayne, IN 46804

IOWA

ASSOCIATED ELECTRONIC MARKETERS, INC.
4001 Shady Oak TEL: (319) 377-1129
Marion, IA 52302 FAX: (319) 377-1539

KANSAS

ASSOCIATED ELECTRONIC MARKETERS, INC.
8843 Long St. TEL: (913) 888-0022
Lenexa, KS 66215 FAX: (913) 888-4848

KENTUCKY

GEN II MARKETING, INC. TEL: (502) 491-5250
8819 Roman Court FAX: (502) 491-5250
Louisville, KY 40291

MARYLAND

PAROGEM, INC. TEL: (301) 269-1898
1419 Forest Drive FAX: (301) 974-8170
Annapolis, MD 21403

MASSACHUSETTS

NEW TECH SOLUTIONS, INC. TEL: (617) 229-8888
111 South Bedford Street FAX: (617) 229-1614
Suite 102
Burlington, MA 01803

MICHIGAN

JENSEN C.B. TEL: (313) 643-0506
2145 Crooks Rd. FAX: (313) 643-4735
Troy, MI 48084

JMJ & ASSOCIATES TEL: (616) 774-9480
678 Front Street FAX: (616) 454-2680
Grand Rapids, MI 49504

MINNESOTA

GP SALES, INC. TEL: (612)831-2362
7600 Parklawn FAX: (612) 831-2619
Suite 315
Edina, MN 55435

MISSOURI

ASSOCIATED ELECTRONIC MARKETERS, INC.
11520 St. Charles Rock Rd. TEL: (314) 298-9900
Suite 131 FAX: (314) 298-8660
Bridgeton, MO 63044

NEW MEXICO

O'DONNELL ASSOCIATES TEL: (505) 889-4522
3200 Carlisle Blvd. NE FAX: (505) 889-4598
Suite 119
Albuquerque, NM 87110

NEW YORK

NEPTUNE ELEC. TEL: (516) 349-1600
255 Executive Dr. FAX: (516) 349-1343
Suite 211
Plainview, NY 11803

T-SQUARED TEL: (315) 463-8592
6443 Ridings Road FAX: (315) 463-1002
Syracuse, NY 13206

T-SQUARED TEL: (716) 924-9101
7353 Victor-Pittsford Road FAX: (716) 924-4946
Victor, NY 14564

NORTH CAROLINA

SOUTH ATLANTIC COMPONENT SALES
4904 Waters Edge Drive TEL: (919) 859-9970
Suite 268 FAX: (919) 859-9974
Raleigh, NC 27606

OHIO

J.N. BAILEY & ASSOCIATES TEL: (513) 687-1325
129 W. Main Street FAX: (513) 687-2930
New Lebanon,OH 45345

J.N. BAILEY & ASSOC.IATES TEL: (614) 262-7274
2978 Findley Avenue FAX: (614) 262-0384
Columbus,OH 43202

J.N. BAILEY & ASSOCIATES TEL: (216) 273-3798
1667 Devonshire Drive FAX: (216) 225-1461
Brunswick,OH 44212

OREGON

ATMI TEL: (503) 643-8307
4900 SW Griffith FAX: (503) 643-4364
Suite 105
Beaverton, OR 97005

PENNSYLVANIA

CMS SALES & MARKETING TEL: (215) 834-6840
527 Plymouth Road FAX: (215) 834-6848
Suite 420
Plymouth Meeting, PA 19462

BAILEY, J.N. & ASSOC. TEL: (412) 568-1392
1660 Hancock Avenue FAX: (412) 568-1479
Apollo, PA 15613

PUERTO RICO

DIGIT-TECH
P.O. Box 1945 TEL: (809) 892-4260
Calle Cruz #2 FAX: (809) 892-3366
Bajos, San German
Puerto Rico 00753

SOUTH CAROLINA

SOUTH ATLANTIC COMPONENT SALES
305 West Royal Tower Dr. TEL: (803) 732-0816
Irmo, SC 29063 FAX: (803) 732-0816

TENNESSEE

SOUTH ATLANTIC COMPONENT SALES
740 Shady Springs Lane TEL: (615) 693-6104
Knoxville, TN 37923 FAX: (615) 693-6104

TEXAS

VIELOCK ASSOCIATES TEL: (214) 881-1940
555 Republic Drive FAX: (214) 423-8556
Suite105
Plano,TX 75074

VIELOCK ASSOCIATES TEL: (512) 345-8498
9430 Research Blvd. FAX: (512) 346-4037
Echelon Bldg. 2, Suite 330
Austin, TX 78759

VIELOCK ASSOCIATES TEL: (713) 974-3287
10700 Richmond Avenue FAX: (713) 974-3289
Suite 108
Houston, TX 77042

UTAH

FRONT RANGE MARKETING, INC.
480 E. 6400 South TEL: (801) 566-2500
Suite 155 FAX: (801) 556-2951
Murray, UT 84107

WASHINGTON

ATMI TEL: (206) 869-7636
8521 154th Ave., NE FAX: (206) 869-9841
Redmond,WA 98052

WISCONSIN

DAVIX INTERNATIONAL LTD. TEL: (414) 255-1600
N91 W17194 Appleton Avenue FAX: (414) 255-1863
Menomonee Falls, WI 53051

SAMSUNG SEMICONDUCTOR SALES OFFICES-EUROPE

SAMSUNG SEMICONDUCTOR EUROPE GmbH Unisys Park 1, Postfach 1061, 6231 Sulz-Bach/TS Germany TEL: 49-6196-58206 FAX: 49-6196-582620 ***MÜNCHEN*** Carl-Zeiss-Ring 9 8045 Ismaning Bei München TEL: 0049-89-964838 FAX: 0049-89-964873	***MILANO*** Viale G. Matteotti, 26 1-20095 Cusano Milanino TEL: 0039-2-66400181 FAX: 0039-2-6192279 ***LONDON*** Samsung House 3 Riverbank Way Great West Road Brentford Middlesex TW8 9RE TEL: 0044-81-8629300 FAX: 0044-81-5680528 TLX: 25823	***PARIS*** Centre d'Affaires La Boursidiere RN 186, Bat. Bourgogne, BP 202 92357 Le Plessis-Robinson TEL: 0033-1-40940700 FAX: 0033-1-40940216 ***STOCKHOLM*** Bergkaellavaegen 32 P.O. Box 319 S-19130 Sollentuna TEL: 0046-8-6269626 FAX: 0046-8-6268638	***BARCELONA*** Diagonal 605, Planta 5 E-08028 Barcelona TEL: 0034-3-4107760 FAX: 0034-3-4108816 ***BELGIUM*** Rue de Geneve 10, B3 B-1140 Brussels TEL: 0032-2-2456510 FAX: 0032-2-2456313

SAMSUNG SEMICONDUCTOR REPRESENTATIVES

EUROPE

AUSTRIA

SATRON HANDELSGESELLSCHAFT mbH
Hoffmeistergasse 8-10 — TEL: 0043-222-8123020
A-1120 Wien — FAX: 0043-222-859593
TLX: 047-75311851

BELGIUM

INELCO ELECTRONICS COMPONENTS DIVISION
Oorlogknisenlaan 94 — TEL: 0032-2-2442911
B-1120 Brussels — FAX: 0032-2-2164606
TLX: 046-25820

DENMARK

EXATEC A/S
Dortheavej 1-3 — TEL: 00453-1-191022
DK-2400 Kopenhagen NV — FAX: 00453-1-193120
TLX: 27253

FINLAND

FINDIP
P.O. Box 64, Vitikka 1 — TEL: 00358-0-5284325
SF-02631 — FAX: 00358-0-5284333
Espoo — TLX: 057-124426

FRANCE

OMNITECH
Bâtiment Evolic 1 165, — TEL: 0033-1-47601247
Boulevard de Valmy — FAX: 0033-1-47601582
F-92705 Colombes — TLX: 042-613890

SONEL-ROHE
6, Rue le Corbusier — TEL: 0033-1-46868170
Silic 424 — FAX: 0033-1-45605549
F-94583 Rungis, Cedex — TLX: 042-206952

GERMANY

ASTRONIC GmbH
Grünwalder Weg 30 — TEL: 0049-89-6130303
D-8024 Deisenhofen — FAX: 0049-89-6131668
TLX: 5216187

CANNING ELECTRONIC DISTRIBUTION GmbH
Laatzener Str. 19 — TEL: 0049-511-865075
Postfach 721226 — FAX: 0049-551-876004
D-3000 Hannover 72 — TLX: 923509

MSC VERTRIEBS GmbH
Industrie Str. 16 — TEL: 0049-7249-7580
Postfach 1380 — FAX: 0049-7249-7993
D-7513 Stutensee 3 — TLX: 465230

MICRONETICS GmbH
Weil Der Staedter Str. 45 — TEL: 0049-7159-6019
D-7253 Renningen 1 — FAX: 0049-7159-5119
TLX: 724708

SILCOM ELECTRONICS VERTRIEBS GmbH
Hindenburg Str. 284 — TEL: 0049-2161-15074
D-4050 Möenchengladbach — FAX: 0049-2161-183313
TLX: 852189

ITALY

DIS. EL. SPA
Via Orbetello 98 — TEL: 0039-11-291930
I-10148 Torino — FAX: 0039-11-2919380

MOXEL S.R.L.
Via C. Frova, 34 — TEL: 0039-2-61290521
I-20092 Cinisello Balsamo — FAX: 0039-2-6172582
TLX: 043-352045

FANTON COMPONENTS S.R.L.
Via O. Simoni, 5 — TEL: 0039-51-735015
I-40011 Anzola dell' Emilia — FAX: 0039-51-735013

6

SAMSUNG SEMICONDUCTOR REPRESENTATIVES

GBC ITALIANA S.R.L.
REDIST Division,
V. LE Matteotti 66
20092 Cinisello Balsamo
MI Italy
TEL: 0039-2-617931
FAX: 0039-2-61290092
TLX: 315366 GBC TERI

THE NETHERLANDS

MALCHUS BV HANDEIMIJ
Fokkerstraat 511-513
Postbus 48
NI-3125 BD Schiedam
TEL: 0031-10-4277777
FAX: 0031-10-4154867
TLX: 044-21598

SPAIN

SEMICONDUCTOR S.A.
Ronda General Mitre
240 Bjs
E-08006 Barcelona
TEL: 0034-3-2172340
FAX: 0034-3-2176598
TLX: 052-C7787

SWEDEN

MIKO KOMPONENTS
Segersbyvaegen 3
P.O. Box 2001
S-14502 Norsborg
TEL: 0046-753-89080
FAX: 0046-753-75340
TLX: 054-15023

SWITZERLAND

PANATEL AG
Hard Str. 72
5430 Wettingen Schweiz
TEL: 0041-56275500
FAX: 0041-56275511
TLX: 045-868763

UNITED KINGDOM

BYTECH COMPONENTS LIMITED
12a Cedarwood Chineham
Business Park Crockford
Lane Chineham Basingstroke
Hampshire RG24 OWD
TEL: 0044-256-707107
FAX: 0044-256-707162

ICE ELECTRONICS LTD.
31-32 Stephenson Road
Burrel Road Industrial Estate
St. Ives Cambridge
PE17 4WJ
TEL: 0044-480-496466
FAX: 0044-480-496621
TLX: 329244

ITT MULTICOMPONENTS LTD.
346 Edinburgh Avenue
Slough Berkshire SL1 4TU
TEL: 0044-753-824212
FAX: 0044-753-824160
TLX: 849808

NELTRONIC LIMITED
John F. Kennedy Road
Naas Road Dublin 12
Ireland
TEL: 00353-1-503560
FAX: 00353-1-552789
TLX: 93556

SAMSUNG SEMICONDUCTOR REPRESENTATIVES

ASIA

HONG KONG

AV, CONCEPT LTD.
ROOM 802-804, Tower A, 8/Fl., TEL: 3629325
Hunghom Commercial Centre, FAX: 7643108
37-39 MA Tau Wai Road, TLX: 52362 ADVCC HX
Hunghom, Kowloon,
Hong Kong

PROTECH COMPONENTS LTD.
Unit 2, 3/F, Wah Shing Centre, TEL: 7930882
11 Shing Yip Street, FAX: 7930811
Kwun Tong, Kowloon,
Hong Kong

WISEWORLD ELECTRONICS LTD.
Room 708, Tower A, 7/Fl., TEL: 7658923
Hunghom Commercial Centre, FAX: 3636203
37-39 Ma Tau Wai Road, Hunghom,
Kowloon, Hong Kong

RIGHT SYSTEM ELECTRONICS LTD.
Room A, 11/F, Tonic Ind. TEL: 7566331
Centre, 26 Kaicheung Road, FAX: 7998985
Kowloon Bay, Kowloon, TLX: 52896 OSPCL HX
Hong Kong

IBDT HK LTD. (CHINA AREA)
Room 605, Arion Commercial TEL: 815-6000
Centre, 2-12, Queen's Road, FAX: 815-3725
West, Hong Kong

SOLARI COMPUTER ENGINEERING LTD.
(4 BIT/8 BIT ONE CHIP SOFTWARE HOUSE)
Room 2018-2025, Tower 1, TEL: 418-0988
Metroplaza, Kwai Fong, FAX: 418-0887
N.T., Hong Kong

DATAWORLD INTERNATIONAL LTD.
(MIYUKI ELECTRONICS (HK) LTD.)
(ASIC DESIGN HOUSE)
Flat No. 3-4, 5/Fl., TEL: 7862611
Yuen Shing Ind. Bldg., FAX: 7856213
1033, Yee Kuk Street, West, TLX: 45876 MYK HX
Kowloon, Hong Kong

SYNTHESIS SYSTEMS DESIGN, LTD.
(ASIC DESIGN HOUSE)
Unit 4, 12/F, Chai Wan Ind. City, TEL: 557-1102
Phase 2, No. 70, Wing Tai Road, FAX: 889-2962
Chai Wan, Hong Kong

TAIWAN

YOSUN INDUSTRIAL CORP.
7F, No. 76, Sec. 1, TEL: (02) 788-1991
Cheng Kung Rd. Nan Kang, FAX: (02) 788-1996
Taipei, R.O.C.

KINREX CORP.
13F, No. 59, Sec. 2, TEL: 02-700-4686—9
Tun Hwa S. Rd, Taipei, FAX: 02-704-2482
Taiwan, R.O.C. TLX: 20402 KINREX

SANT SONG CORP.
15F-2, Na 76, Sec. 2, TEL: (02) 703-1767
Tun Hwa S. Rd. Taipei, FAX: (02) 704-0645
Taiwan, R.O.C.

JAPAN

TOMEN ELECTRONICS CORP.
1-1 Uchisaiwa-Cho 2 Chome TEL: (03) 3506-3654
Chiyoda-Ku Tokyo, 100 Japan FAX: (03) 3506-3497

RIKEI
Nichimen Bldg., TEL: (06) 201-2081
2-2 Nakanojima 2 Chome FAX: (06) 222-1185
Kita-Ku, Osaka, 530 Japan

ISECO
26-3, Kitamagome 2 chome, TEL: (03) 3777-3611
Ota-ku, Tokyo, 143, Japan FAX: (03) 3777-3614

ADO
7F Sasage Bldg., TEL: (03) 3257-2600
4-6 Sotokanda 2 Chome FAX: (03) 3251-9705
Chiyoda-Ku Tokyo, 101 Japan

MARUBUN
8-1 Nihombashi-Odenma-Cho TEL: (03) 3639-9897
Chuo-Ku Tokyo, 103 Japan FAX: (03) 3661-7433

SAMSUNG JAPAN
No. 3108 Kasumigaseki Bldg., TEL: (03) 3581-7565
3-2-5 Kasumigaseki Tokyo, FAX: (03) 3507-0923
100 Japan

SINGAPORE

ASTINA ELECTRONICS PTE, LTD.
315, Outram Road, #11-02 TEL: 65-2232221
Tan Boon Liat Building, FAX: 65-2213776
Singapore 0315

BOSTEX ELECTRONICS PTE, LTD.
190 Middle Road TEL: 65-3395713
#12-01A Fortune Centre FAX: 65-3389536
Singapore, 0718

SAMSUNG(THAILAND) CO., LTD.
15th Fl. Sathorn Thani Bldg., TEL: 662-2367642-5
92/40-41 North Sathorn Road FAX: 662-2368049
Bankok 10500, Thailand

SOUTH-WEST ELECTRONICS PTE, LTD.
30 Kallang Pudding Road, TEL: 65-7431813 (4Lines)
#04-04 Valiant Industrial Bldg., FAX: 65-7471128
Singapore, 1334

VUTIPONG ELECTRONIC CO., LTD.
51-53 Pahurat Rd,(Banmoh) TEL: 662-2266496-9
Bankok 10200, Thailand FAX: 662-2240861

YIC SINGAPORE PTE, LTD.
623, Aljunied Road, #06-08 TEL: 65-7490677
Aljunied Industrial Complex, FAX: 65-7477019
Singapore, 1438

6

SAMSUNG SEMICONDUCTOR REPRESENTATIVES

INDIA

COMPONENTS AND SYSTEMS MARKETING ASSOCIATES (INDIA) PVT. LTD.
100, Dadasaheb Phalke Road, Dadar, Bombay 400 014
TEL: 4114585
FAX: 4112546
TLX: 001-4605 PDT IN

TURKEY

ELEKTRO SAN. VE TIC. KOLL STI.
Hasanpasa, Ahmet Rasim Sok No. 16 Kadikoy Istanbut, Turkey
TEL: 337-2245
FAX: 336-8814
TLX: 29569 elts tr

THAILAND

VUTIPONG TRADING LTD., PART.
51-53 Pahurat Rd. (Banmoh) Bangkok 10200 THAILAND
TEL: 221-9699-3641
223-4608
FAX: 224-0861
TLX: 87470 Vutipong TH

KOREA

NAEWAE SEMICONDUCTOR CO., LTD.
710-10, Daelim-dong, Youngdeungpo-ku, Seoul, Korea
TEL: 846-9101
FAX: 845-1112
TLX: NELCO K27419

SAMSUNG LIGHT-ELECTRONICS CO., LTD.
4th Fl. Room 2-3, Electronics Main Bldg., 16-9, Hankangro-3ka, Yongsan-ku, Seoul, Korea
TEL: 718-0045
718-9531—5
FAX: 718-9536

NEWCASTLE SEMICONDUCTOR CO., LTD.
4th Fl. Room 410-411, Electronics Main Bldg., 16-9, Hankangro-3ka, Yongsan-ku, Seoul, Korea
TEL: 718-8531—4
FAX: 718-8535

HANKOOK SEMICONDUCTOR & TELECOMMUNICATIONS CO., LTD.
402 Suite, Sowon Bldg., 354-22, Seokyo-dong, Mapo-ku, Seoul, Korea
TEL: 338-2015—8
FAX: 338-2983

SEGYUNG INTERISE CORP.
Dansan Bldg., 301, 7-44 Hwayang-dong, Sungdong-ku, Seoul, Korea
TEL: (02) 469-7969
FAX: (02) 469-7966

SEGYUNG ELECTRONICS
182-2, Jangsa-dong, Jongro-ku, Seoul, Korea
TEL: 273-6781—3
FAX: (02) 273-6597
TLX: K24950 SUKSEMT

SAMTEK
71, Samsung-dong, Kangnam-ku, Seoul, Korea
TEL: (02) 516-3166—9
FAX: (02) 544-9650

SUNIN INDUSTRIES CO., LTD.
Sunin Bldg., 7Fl., 16-1, Hankangro-2ka, Yongsan-ku, Seoul, Korea
TEL: 718-7113—6
702-1257—9
FAX: 715-1031

SAEHAN SEMICONDUCTOR CO., LTD.
Jeil Bldg., 1301, Gongduk-dong, Mapo-ku, Seoul, Korea
TEL: (02) 711-8300
FAX: (02) 711-7038

SAMSUNG SEMICONDUCTOR DISTRIBUTORS

ARIZONA

ADDED VALUE (602) 951-9788
7741 East Gray Road FAX: (602) 952-4182
Suite #9
Scottsdale, AZ 85260

CALIFORNIA

ADDED VALUE (714) 259-8258
1582 Parkway Loop FAX: (714) 259-0828
Unit G
Tustin, CA 92680

ADDED VALUE (619) 558-8890
5752 Oberlin Drive FAX: (619) 558-3018
Suite 105
San Diego, CA 92121

ALL AMERICAN (800) 669-8300
369 Van Ness Way #701 (213) 320-7207
Torrance, CA 90501 FAX: (213) 320-7207

ALL AMERICAN (408) 943-1200
2360 Qume Drive, Suite C FAX: (408) 943-1393
San Jose, CA 95131

ALL AMERICAN (619) 458-5850
5060 Shoreham Place FAX: (619) 458-5866
Suite 200
San Diego, CA 92122

I.E.C. (916) 363-6030
9940 Business Park Drive FAX: (916) 362-6926
Suite 145
Sacramento, CA 95827

ITT Components (714) 727-4001
5 Jenner Street FAX: (714) 727-2109
Irvine, CA 92718

ITT Components (408) 453-1404
1580 Oakland Road FAX: (408) 453-1407
Suite #C102
San Jose, CA 95131

JACO (714) 258-9003
1541 Parkway Loop FAX: (714) 258-1909
Suite A
Tustin, CA 92680

JACO (805) 495-9998
2282 Townsgate Road (800) 266-1282
Suite 100 FAX: (805) 494-3864
Westlake Village, CA 91361

JACO (408) 432-9290
2880 Zanker Road FAX: (408) 432-9298
Suite 202
SAN JOSE, CA 95134

CANADA

ACTIVE (514) 694-7710
237 Hymus Boulevard FAX: (514) 697-8112
Point Claire, Quebec H9R 5C7

ACTIVE (604) 324-7500
100 S.E. Marine Drive FAX: (604) 324-3100
Vancouver, BC V5X 2S3

ACTIVE (416) 367-2911
100 Lombard Street FAX: (416) 367-4706
Toronto, Ontario M5C 1M3

ACTIVE (514) 731-7441
5651 Ferrier Street FAX: (514) 731-0129
Montreal, Quebec H4AP 1N1

ACTIVE (403) 235-5300
3220 5th Avenue, N.E. Bay 2 FAX: (403) 248-0750
Calgary, Alberta T2A 5N1

ACTIVE (204) 786-3075
106 King Edward St., E FAX: (204) 783-8133
Winnepeg, Manitoba R3H 0N8

ACTIVE (416) 238-8825
1350 Matheson Blvd, Unit 2 FAX: (416) 238-2817
Mississauga, Ontario L4W 4MI

ACTIVE (403) 438-5888
6029 103rd St. FAX: (403) 434-0812
Edmonton, Alberta T6H 2H3

ACTIVE (418) 682-5775
1990 Blvd. Charest O. FAX: (418)682-8303
Ste-Foy, Quebec G1N 4K8

ACTIVE (613) 728-7900
1023 Merivale Road FAX: (613) 728-3586
Ottawa, Ontario K1Z 6A6

ACTIVE (514) 256-7538
6080 Metropolitan East FAX: (514) 256-4890
Montreal, Quebec H1S 1A9

G.B. MICRO ELECTRONICS (514) 333-7373
9770 Henri Bourassa W. FAX: (514) 334-7707
Ville St. Laurent,
Quebec H4S 1R5

G.B. MICRO ELECTRONICS (416) 672-6767
2777 Thamesgate Dr. FAX: (416) 672-6788
Mississauga, Ontario L4T 1G5

COLORADO

ADDED VALUE (303) 422-1701
4090 Youngfield FAX: (303) 422-2529
Wheat Ridge, CO 80033

I.E.C. (303) 292-5537
420 East 58th Avenue FAX: (303) 292-0114
Denver, CO 80216

I.E.C. (303) 292-6121
5750 North Logan Street FAX: (303) 297-2053
Denver, CO 80216

Q.P.S. (303) 343-9260
14291 E. 4th Avenue FAX: (303) 343-3051
Bldg. 7, Unit 208
Aurora, CO 80011

CONNECTICUT

GREENE-SHAW (203) 265-3333
65 So. Turnpike Rd. FAX: (203) 265-3583
Wallingford, CT 06492

FLORIDA

ALL AMERICAN (305) 621-8282
16085 NW 52 Avenue FAX: (305) 620-7831
Miami, FL 33014-9317

ALL AMERICAN (800) 327-6237
5009 Hiatus Road FAX: (305) 749-9229
Sunrise, FL 33351

GREENE-SHAW (407) 951-3636
270 East Drive
Melbourne, FL 32904

JACO (407) 241-7943
1060 Holland Drive FAX: (407) 241-7950
Suite 3K
Boca Raton, FL 33487

6

***FLORIDA** (Continued)*

RM ELECTRONICS (407) 767-8005
581 East St. Rte. 434 FAX: (407) 767-8165
Longwood, FL 32750

ILLINOIS

QPS (708) 884-6620
101 E. Commerce Dr. FAX: (708) 884-7573
Suite A
Schaumburg, IL 60173

I.E.C. (708) 843-2040
2200 N. Stronington Ave., FAX: (708) 843-2320
Suite 210
Hoffman Estates, IL 60195

INDIANA

RM ELECTRONICS (317) 580-9999
1329 W. 96th Street FAX: (317) 580-9615
Suite 10
Indianapolis, IN 46260

MARYLAND

ALL AMERICAN (301) 251-1205
14636 Rothgeb Dr. FAX: (301) 251-8574
Rockville, MD 20850

JACO (301) 995-6620
Rivers Center FAX: (301) 995-6032
10270 Old Columbia Road
Columbia, MD 21046

MASSACHUSETS

ALL AMERICAN (617) 246-2300
107 Audubon Road FAX: (617) 246-2305
Suite 104
Wakefield, MA 01880

GREENE-SHAW (617) 969-8900
70 Bridge Street FAX: (617) 969-4712
Newton, MA 02195

JACO (508) 640-0010
1053 East Street. FAX: (508) 640-0755
Tewksbury, MA 01876

MICHIGAN

RM ELECTRONICS (616) 531-9300
4310 Roger B. Chaffee Drive FAX: (616) 531-2990
Grand Rapids, MI 49548

MINNESOTA

ALL AMERICAN (612) 944-2151
11409 Valley View Road FAX: (612) 944-9803
Eden Prairie, MN 55344

NEW YORK

ALL AMERICAN (516) 981-3935
711-2 Koehier Ave. FAX: (516) 981-3947
Ronkonkoma, NY 11779

CAM/RPC (716) 427-7535
2975 Brighton Henrietta Road FAX: (716) 427-7559
Rochester, NY 14623

JACO (516)-273-5500
145 Oser Avenue FAX: (516) 273-5506
Hauppauge, NY 11788

NORTH CAROLINA

JACO (919) 876-7767
3029-107 Stonybrook Drive FAX: (919) 876-6964
Raleigh, NC 27604

GREENE-SHAW (919) 954-7138
6200 Falls of the Neuse Road FAX: (919) 954-7139
Suite 200
Raleigh, NC 27609

OHIO

CAM/RPC (216) 461-4700
749 Miner Road FAX: (216) 461-4329
Cleveland, OH 44143

CAM/RPC (614) 888-7777
733 H. Lakeview Plaza Rd. FAX: (614) 888-9779
Worthington, OH 43085

CAM/RPC (513) 898-1111
7956 Strawberry Hill Lane FAX: (513) 433-6792
Maineville, OH 45039

OREGON

I.E.C. (503) 641-1690
6850 S.W. 105th Ave. FAX: (503) 646-3737
Suite B
Beaverton, Oregon 97005

PENNSYLVANIA

CAM/RPC (412) 782-3770
620 Alpha Drive FAX: (412) 963-6210
Pittsburgh, PA 15238

TEXAS

ALL AMERICAN (214) 231-5300
1819 Firman Drive FAX: (214) 437-0353
Suite 127
Richardson, TX 75081

JACO (214) 733-4300
4251 Kellway Circle FAX: (214) 250-0216
Addison, TX 75244

JACO (713) 240-2255
10707 Corporate Drive FAX: (713) 240-6988
Stafford, TX 77477

JACO (512) 835-0220
2120-M Braker Lane FAX: (512) 339-9252
Austin, TX 78758

UTAH

ADDED VALUE (801) 975-9500
1836 Parkway Blvd. FAX: (801) 977-0245
West Valley City, UT 84119

I.E.C. (801) 977-9750
2117 South 3600 West FAX: (802) 975-1207
W. Valley City, UT 84119

WASHINGTON

I.E.C. (206) 455-2727
1750 124th Avenue, N.E. FAX: (206) 453-2963
Bellevue, WA 98005

SAMSUNG
Electronics

Semiconductor Business

HEAD OFFICE :

8/10FL., SAMSUNG MAIN BLDG.
250, 2-KA, TAEPYUNG-RO,
CHUNG-KU,SEOUL,KOREA
C.P.O.BOX 8780

TELEX : KORSST K27970
TEL : (SEOUL) 727-7114
FAX : 753-0967

BUCHEON PLANT :

82-3, DODANG-DONG,
BUCHEON, KYUNGKI-DO, KOREA
C.P.O.BOX 5779 SEOUL 100

TELEX : KORSEM K28390
TEL : (SEOUL) 740-6114
FAX : 741-4273

KIHEUNG PLANT :

SAN #24 NONGSUH-RI, KIHEUNG-MYUN,
YONGIN-GUN, KYUNGKI-DO, KOREA
C.P.O.BOX 37 SUWON

TELEX : KORSST K23813
TEL : (SEOUL) 760-7114
FAX : 741-0628

GUMI BRANCH :

259, GONDAN-DONG, GUMI,
KYUNGSANGBUK-DO, KOREA

TELEX : SSTGUMI K54371
TEL : (0546) 463-2570
FAX : (0546) 461-9258

SAMSUNG SEMICONDUCTOR INC. :

3725 NORTH FIRST STREET
SAN JOSE, CA 95134-1708, USA

TEL : (408) 954-7000
FAX : (408) 954-7873

SAMSUNG SEMICONDUCTOR EUROPE GMBH :

UNISYS PARK 1, POSTFACH 1061,
6231 SULZ-BACH/TS
GERMANY

TEL : 49-6196-58206
FAX : 49-6196-582620

SAMSUNG ELECTRONICS JAPAN CO., LTD. :

8F. SUDACHO VERDE BLDG.
2-3 KANDA-SUDACHO, CHIYODA-KU,
TOKYO, 101 JAPAN

TELEX : 2225206 SECJPN J
TEL : (03) 3258-9501
FAX : (03) 3258-9695

SAMSUNG ELECTRONICS HONGKONG CO., LTD. :

24FL., ADMIRALTY CENTER,
TOWR 1, 18 HARCOURT ROAD,
QUEENSWAY, HONG KONG

TELEX : 80303 SSTC HX
TEL : 862-6900
FAX : 866-1343

SAMSUNG ELECTRONICS CO., LTD., TAIWAN BRANCH :

RM 2401, 24F., INT'L TRADE BLDG., 333,
KEE LUNG RD., SEC. 1,
TAIPEI, TAIWAN

TEL : (2) 757-7292
FAX : (2) 757-7311

SAMSUNG ELECTRONICS SINGAPORE PTE LTD. :

4. SHENTON WAY, #18-01/10
SHINGWAN HOUSE, SINGAPORE 0106

TEL : 535-2808
FAX : 227-2792

SAMSUNG ELECTRONICS SHANGHAI OFFICE :

SUITE 561,
THE AMERICAN INTERNATIONAI CENTRE,
AT SHANGHAL CENTRE,
1376 NANJING XI LU SHANGHAI,
CHINA, POSTCODE 200040

TEL : 021-2798415
FAX : 021-2798416

PRINTED IN KOREA
NOVEMBER, 1992